Solid Carbide Insert V-Groove

INDUSTRIAL

RC-1111

This is an Amana Tool proprietary drawing.

Warning: This DXF file shall be used on a CNC machine only, in accordance with the Amana Tool® product number listed above. This DXF file shall never be used with any other tools or products including, without limitation, those with similiar measurements. Failure to adhere to this warning is dangerous and can result in bodily injury or property damage.

© Copyright Amana Tool® All Rights Reserved

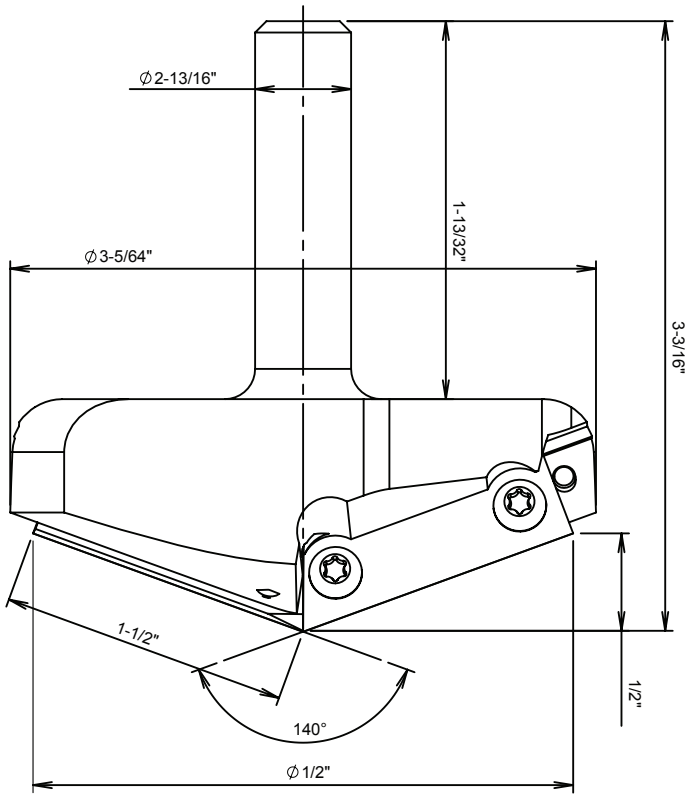

Amana Tool®