TECHNIKS MODULAR BORING SOLUTIONS

MODULAR BORING SYSTEMS FOR SMALL TO LARGE DIAMETER BORING



BOHRSTAR BORING KITS

RANGE: FROM .314" TO 8.27"

Choose BohrSTAR boring kits for an easy-to-use boring system, without the expense of dedicated boring tools.

see page 176



ULTRAFINE FINISH HEADS

75˚ & 90˚ HEADS AVAILABLE

UltraFINE finish heads feature an 11˚ relief angle that provides an ultra-smooth finish, reducing the need for extra operations.

see page 200

MACROBOHR LARGE HOLE BORING SYSTEM

RANGE: FROM 8.661" TO 40.157"

The MacroBOHR boring system is a lightweight line of tools optimized for large diameter boring.

see page 219



BOHRSTAR 43 KIT -TRIANGULAR INSERTS

pg. 204 pg. 206 pg. 216 pg. 229

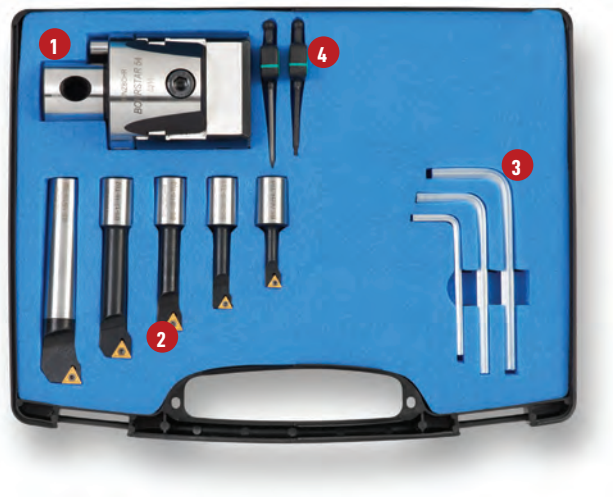

Kit Part No.	Description	Range
6991215	BS-54-KIT-TC-8-43	0.314" – 1.692"

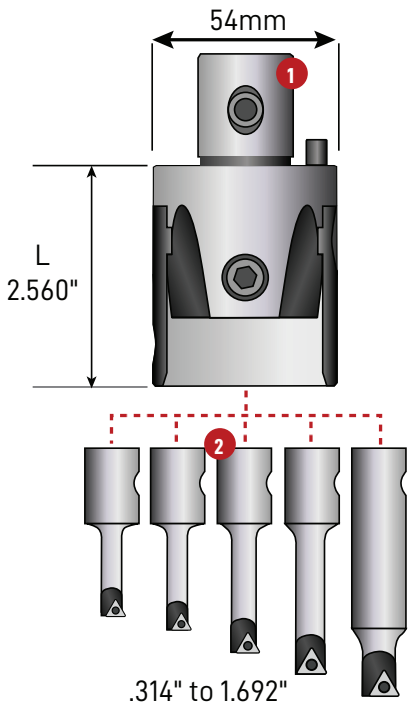

INCLUDES TRIANGULAR INSERTS:

- 2 Pcs. TCMT 1.21._
- 3 Pcs. TCMT 1.81._

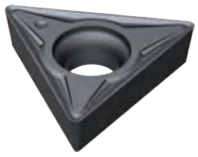

TCMT

RANGE: 0.314" TO 1.692"

BohrSTAR kits are designed for maximum performance and ease-of-use (no spacers or complicated set-ups). Our boring tools out perform all others when it comes to accuracy, rigidity, and repeatability.

Our exclusive, modular coupling system features two tapered locking screws that provide maximum rigidity between the boring head and the toolholder to increase accuracy. All connections are easily made using the tools provided.

BOHRSTAR 43 KIT INCLUDES THESE COMPONENTS

	Part No.	Description	Length
1	6951234	BS-54-16-W head	2.560"
2	6943333	BS-06-16-T01 6mm bar	.984"
	6943334	BS-08-16-T01 8mm bar	1.378"
	6943335	BS-10-16-T02 10mm bar	1.772"
	6943336	BS-12-16-T02 12mm bar	2.244"
	6943337	BS-16-16-T02 16mm bar	2.874"
3	6962233	H3 hex wrench	-
	6962235	H5 hex wrench	-
	6962236	H6 hex wrench	-
4	6972236	T6 Torx wrench	-
	6972237	T7 Torx wrench	-

KIT BORING BAR & INSERT SPECIFICATIONS

		Bore Range					
Boring Bar Part No.	Description	Min	Max	L	Insert	Insert Screw	Wrench
6943333	BS-06-16-T01	.314"	1.181"	.984"	TCMT 1.21._	6811220	9355111
6943334	BS-08-16-T01	.394"	1.260"	1.378"	TCMT 1.21._	6811235	9355111
6943335	BS-10-16-T02	.512"	1.378"	1.772"	TCMT 1.81.5_	6811250	9355222
6943336	BS-12-16-T02	.630"	1.496"	2.244"	TCMT 1.81.5_	6811250	9355222
6943337	BS-16-16-T02	.787"	1.692"	2.874"	TCMT 1.81.5_	6811250	9355222

BOHRSTAR 43 KIT - RHOMBIC INSERTS

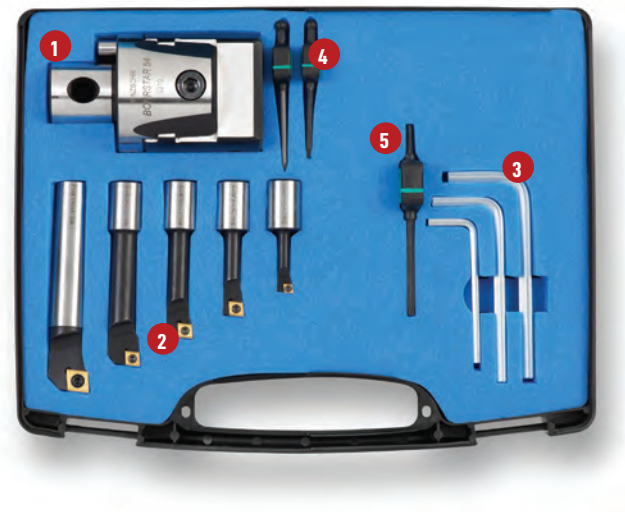

Kit Part No.	Description	Range
6991210	BS-54-KIT-RC-8-43	0.314" – 1.692"

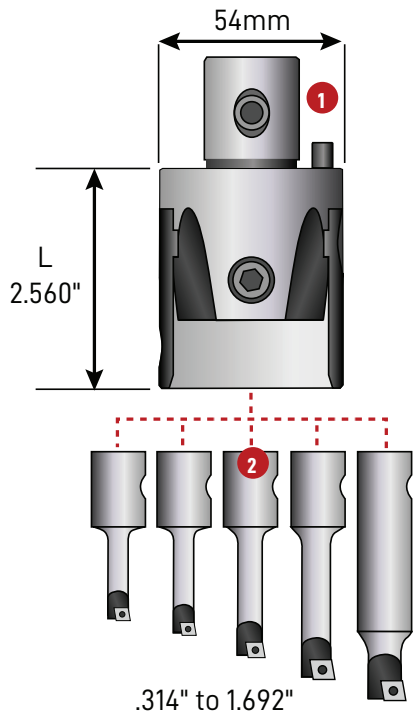

INCLUDES RHOMBIC INSERTS:

- 1 Pc. EPMT 1.5_
- 3 Pcs. CCMT 21.5_
- 1 Pc. CCMT 32.5_



CCMT

RANGE: 0.314" TO 1.692"

BohrSTAR kits are designed for maximum performance and ease-of-use (no spacers or complicated set-ups). Our boring tools out perform all others when it comes to accuracy, rigidity, and repeatability.

Our exclusive, modular coupling system features two tapered locking screws that provide maximum rigidity between the boring head and the toolholder to increase accuracy. All connections are easily made using the tools provided.

BOHRSTAR 43 KIT INCLUDES THESE COMPONENTS

	Part No.	Description	Length
1	6951234	BS-54-16-W head	2.560"
2	6942234	BS-06-16-R02 6mm bar	.984"
	6942235	BS-08-16-R03 8mm bar	1.378"
	6942236	BS-10-16-R03 10mm bar	1.772"
	6942237	BS-12-16-R03 12mm bar	2.244"
	6942238	BS-16-16-R04 16mm bar	2.874"
3	6962233	H3 hex wrench	-
	6962235	H5 hex wrench	-
	6962236	H6 hex wrench	-
4	6972238	T8 Torx wrench	-
	6972237	T7 Torx wrench	-
5	6972215	T15 Torx wrench	-

KIT BORING BAR & INSERT SPECIFICATIONS

		Bore Range					
Boring Bar Part No.	Description	Min	Max	L	Insert	Insert Screw	Wrench
6942234	BS-06-16-R02	.314"	1.181"	.984"	EPMT 1.53._	6811220	9355222
6942235	BS-08-16-R03	.394"	1.260"	1.378"	CCMT 21.5_	6811235	9355333
6942236	BS-10-16-R03	.512"	1.378"	1.772"	CCMT 21.5_	6811250	9355333
6942237	BS-12-16-R03	.630"	1.496"	2.244"	CCMT 21.5_	6811250	9355333
6942238	BS-16-16-R04	.787"	1.692"	2.874"	CCMT 32.5_	6811260	9355555

BOHRSTAR 100 KIT - TRIANGULAR INSERTS

pg. 204 pg. 206 pg. 216 pg. 229

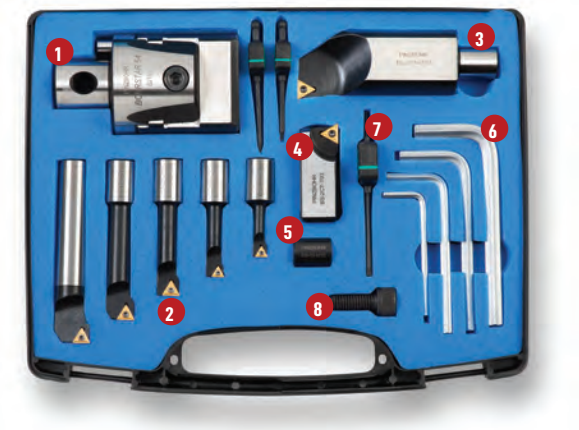

INCLUDES TRIANGULAR INSERTS:

- 2 Pcs. TCMT 1.21._
- 3 Pcs. TCMT 1.81._
- 2 Pcs. TCMT 32.5_

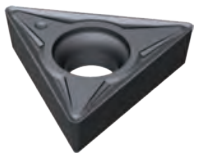

TCMT

RANGE: 0.314" TO 3.94"

Kit Part No.	Description	Range
6991235	BS-54-KIT-TC-8-100	0.314" – 3.94"

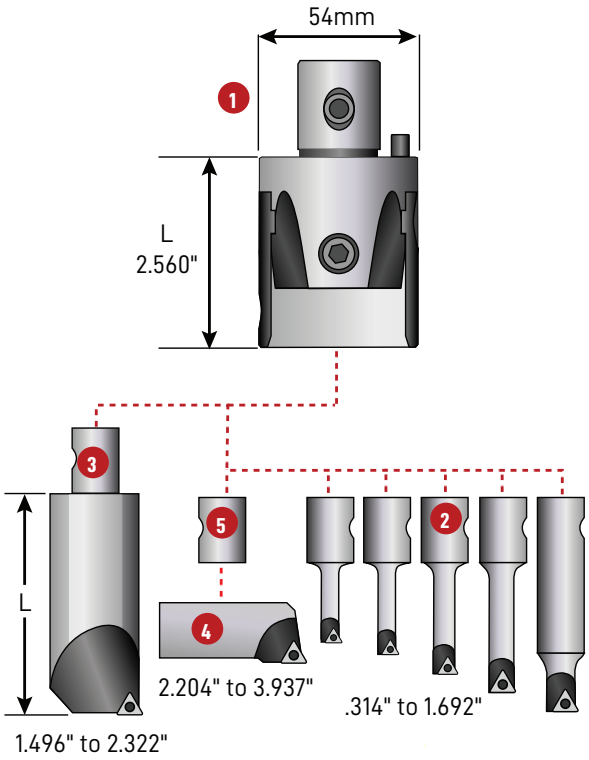

BOHRSTAR 100 KIT INCLUDES THESE COMPONENTS

	Part No.	Description	Length
1	6951234	BS-54-16-W head	2.560"
2	6943333	BS-06-16-T01 6mm bar	.984"
	6943334	BS-08-16-T01 8mm bar	1.378"
	6943335	BS-10-16-T02 10mm bar	1.772"
	6943336	BS-12-16-T02 12mm bar	2.244"
	6943337	BS-16-16-T02 16mm bar	2.874"
3	6943338	BS-34-16-T04 34mm bar	3.228"
4	6922243	BS-2CT-T04 cartridge	
5	6921239	BS-16-M10 location sleeve	
6	6962233	H3 hex wrench	
	6962235	H5 hex wrench	
	6962236	H6 hex wrench	
	6962238	H8 hex wrench	
7	6972236	T6 Torx wrench	
	6972237	T7 Torx wrench	
	6972215	T15 Torx wrench	
8	6921241	CS-10-25 cartridge screw	

KIT BORING BAR & INSERT SPECIFICATIONS

		Bore Range					
Boring Bar Part No.	Description	Min	Max	L	Insert	Insert Screw	Wrench
6943333	BS-06-16-T01	.314"	1.181"	.984"	TCMT 1.21._	6811220	9355111
6943334	BS-08-16-T01	.394"	1.260"	1.378"	TCMT 1.21._	6811235	9355111
6943335	BS-10-16-T02	.512"	1.378"	1.772"	TCMT 1.81.5_	6811250	9355222
6943336	BS-12-16-T02	.630"	1.496"	2.244"	TCMT 1.81.5_	6811250	9355222
6943337	BS-16-16-T02	.787"	1.692"	2.874"	TCMT 1.81.5_	6811250	9355222
6943338	BS-34-16-T04	1.496"	2.322"	3.228"	TCMT 32.5_	6811260	9355555
6922243	BS-2CT-T04 cartridge	2.204"	3.937"	.787"	TCMT 32.5_	6811260	9355555

BOHRSTAR 100 KIT - RHOMBIC INSERTS

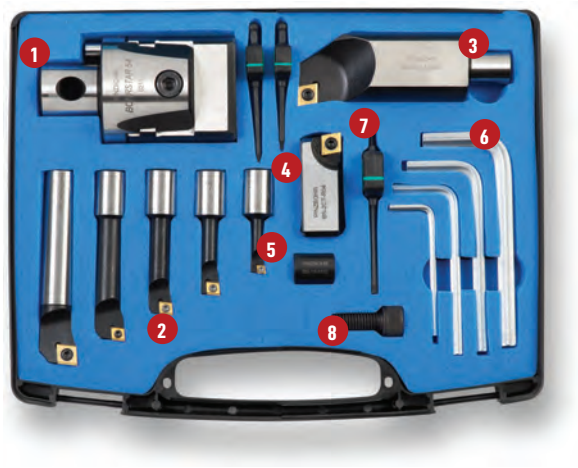

INCLUDES RHOMBIC INSERTS:

- 1 Pc. EPMT 1.5_
- 3 Pcs. CCMT 21.5_
- 3 Pcs. CCMT 32.5_

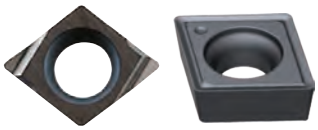

EPMT CCMT

RANGE: 0.314" TO 3.94"

Kit Part No.	Description	Range
6991220	BS-54-KIT-RC-8-100	0.314" – 3.94"

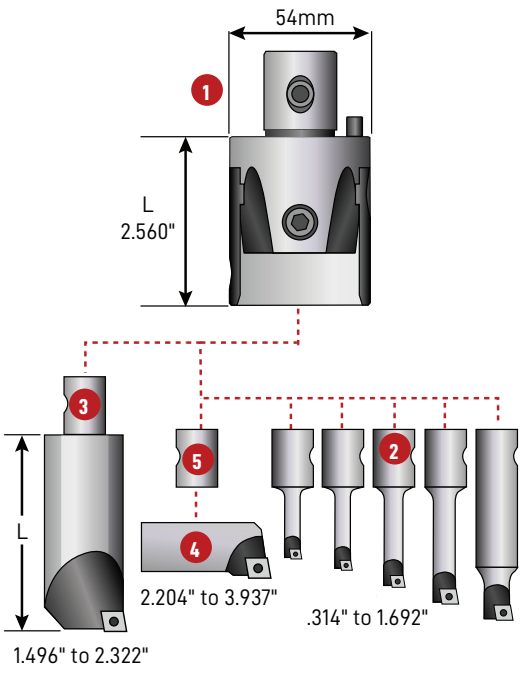

BOHRSTAR 100 KIT INCLUDES THESE COMPONENTS

	Part No.	Description	Length
1	6951234	BS-54-16-W Head	2.560"
2	6942234	BS-06-16-R02 6mm bar	.984"
	6942235	BS-08-16-R03 8mm bar	1.378"
	6942236	BS-10-16-R03 10mm bar	1.772"
	6942237	BS-12-16-R03 12mm bar	2.244"
	6942238	BS-16-16-R04 16mm bar	2.874"
3	6942239	BS-34-16-R04 34mm bar	3.228"
4	6922243	BS-2CT-R04 Cartridge	
5	6921239	BS-16-M10 Location sleeve	
6	6962233	H3 hex wrench	
	6962235	H5 hex wrench	
	6962236	H6 hex wrench	
	6962238	H8 hex wrench	
7	6972238	T8 Torx wrench	
	6972237	T7 Torx wrench	
	6972215	T15 Torx wrench	
8	6921241	CS-10-25 Cartridge screw	

KIT BORING BAR & INSERT SPECIFICATIONS

		Bore Range					
Boring Bar Part No.	Description	Min	Max	L	Insert	Insert Screw	Wrench
6942234	BS-06-16-R02	.314"	1.181"	.984"	EPMT 1.53._	6811220	9355222
6942235	BS-08-16-R03	.394"	1.260"	1.378"	CCMT 21.5_	6811235	9355333
6942236	BS-10-16-R03	.512"	1.378"	1.772"	CCMT 21.5_	6811250	9355333
6942237	BS-12-16-R03	.630"	1.496"	2.244"	CCMT 21.5_	6811250	9355333
6942238	BS-16-16-R04	.787"	1.692"	2.874"	CCMT 32.5_	6811260	9355555
6942239	BS-34-16-R04	1.496"	2.322"	3.228"	CCMT 32.5_	6811260	9355555
6922243	BS-2CT-R04 Cartridge	2.204"	3.937"	.787"	CCMT 32.5_	6811260	9355555

BOHRSTAR 170 KIT - TRIANGULAR INSERTS

pg. 204 pg. 206 pg. 216 pg. 229

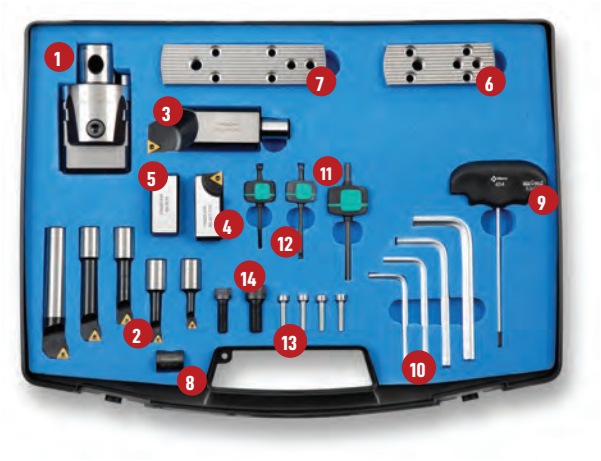

INCLUDES TRIANGULAR INSERTS:

- 2 Pc. TCMT 1.21._
- 3 Pcs. TCMT 1.81._
- 2 Pcs. TCMT 32.5_

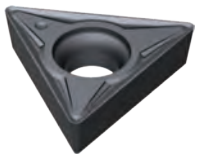

TCMT

RANGE: .314" TO 6.69"

Kit Part No.	Description	Range
6991250	BS-54-KIT-TC-8-170	0.314" – 6.69"

BOHRSTAR 170 KIT INCLUDES THESE COMPONENTS

	Part No.	Description	Length
1	6951234	BS-54-16-W Head	2.560"
	6943333	BS-06-16-T01 6mm Bar	.984"
	6943334	BS-08-16-T01 8mm Bar	1.378"
2	6943335	BS-10-16-T02 10mm Bar	1.772"
	6943336	BS-12-16-T02 12mm Bar	2.244"
	6943337	BS-16-16-T02 16mm Bar	2.874"
3	6943338	BS-34-16-T04 34mm Bar	3.228"
4	6922243	BS-2CT-T04 Cartridge	.787"
5	6921235	BS-2CW Counterweight	.728"
6	6921236	BS-SP-85-130 Small plate	.787"
7	6921237	BS-SP-125-170 Medium plate	.787"
8	6921239	BS-16-M10 Location sleeve	

	Part No.	Description
9	6921243	A3 Adjusting key
10	6962234	H4 hex wrench
	6962235	H5 hex wrench
	6962236	H6 hex wrench
	6962238	H8 hex wrench
11	6972237	T7 Torx wrench
	6972238	T8 Torx wrench
	6972215	T15 Torx wrench
12	6921240	D-27-21 Plate fixing screws
13	6921241	CS-10-25 Cartridge screw
14	6921242	CS-08-25 Counterweight screw

KIT BORING BAR & INSERT SPECIFICATIONS

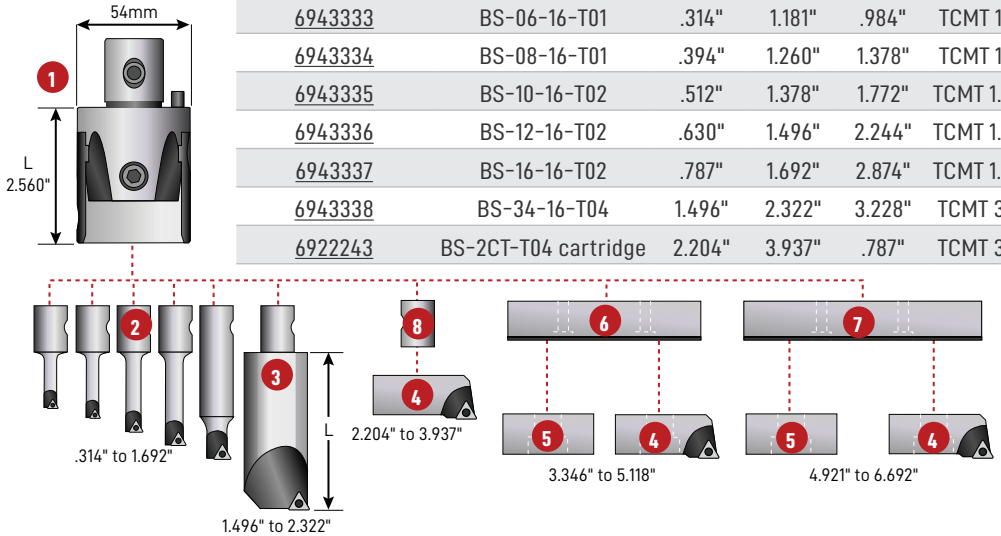

Boring Bar Part No.	Description	Bore Range Min	Bore Range Max	L	Insert	Insert Screw	Wrench
6943333	BS-06-16-T01	.314"	1.181"	.984"	TCMT 1.21._	6811220	9355111
6943334	BS-08-16-T01	.394"	1.260"	1.378"	TCMT 1.21._	6811235	9355111
6943335	BS-10-16-T02	.512"	1.378"	1.772"	TCMT 1.81.5_	6811250	9355222
6943336	BS-12-16-T02	.630"	1.496"	2.244"	TCMT 1.81.5_	6811250	9355222
6943337	BS-16-16-T02	.787"	1.692"	2.874"	TCMT 1.81.5_	6811250	9355222
6943338	BS-34-16-T04	1.496"	2.322"	3.228"	TCMT 32.5_	6811260	9355555
6922243	BS-2CT-T04 cartridge	2.204"	3.937"	.787"	TCMT 32.5_	6811260	9355555

BOHRSTAR 170 KIT - RHOMBIC INSERTS

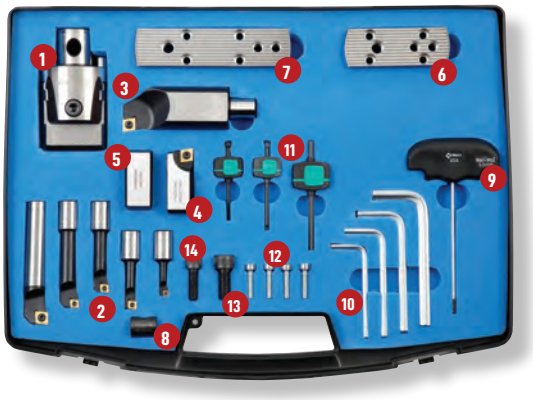

INCLUDES RHOMBIC INSERTS:

- 1 Pc. EPMT 1.5_
- 3 Pcs. CCMT 21.5_
- 3 Pcs. CCMT 32.5_

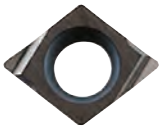
EPMT


CCMT

RANGE: 0.314" TO 6.69"

Kit Part No.	Description	Range
6991230	BS-54-KIT-RC-8-170	0.314" – 6.69"

BOHRSTAR 170 KIT INCLUDES THESE COMPONENTS

	Part No.	Description	Length
1	6951234	BS-54-16-W head	2.560"
2	6942234	BS-06-16-R02 6mm bar	.984"
	6942235	BS-08-16-R03 8mm bar	1.378"
	6942236	BS-10-16-R03 10mm bar	1.772"
	6942237	BS-12-16-R03 12mm bar	2.244"
	6942238	BS-16-16-R04 16mm bar	2.874"
3	6942239	BS-34-16-R04 34mm bar	3.228"
4	6921234	BS-2CT-R04 cartridge	.787"
5	6921235	BS-2CW counterweight	.728"
6	6921236	BS-SP-85-130 small plate	.787"
7	6921237	BS-SP-123-170 medium plate	.787"
8	6921239	BS-16-M10 location sleeve	-

	Part No.	Description
9	6921243	A3 adjusting key
10	6962234	H4 hex wrench
	6962235	H5 hex wrench
	6962236	H6 hex wrench
	6962238	H8 hex wrench
11	6972237	T7 Torx wrench
	6972238	T8 Torx wrench
	6972215	T15 Torx wrench
12	6921240	D-27-21 plate fixing screws
13	6921241	CS-10-25 cartridge screw
14	6921242	CS-08-25 counterweight screw

KIT BORING BAR & INSERT SPECIFICATIONS

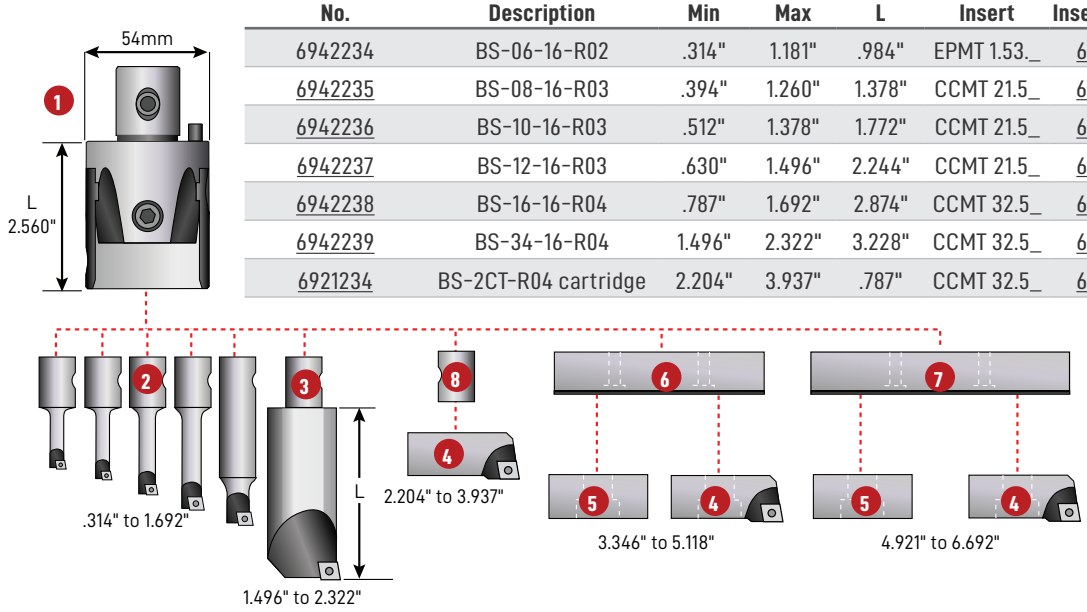

Boring Bar Part No.	Description	Bore Range Min	Max	L	Insert	Insert Screw	Wrench
6942234	BS-06-16-R02	.314"	1.181"	.984"	EPMT 1.53._	6811220	9355222
6942235	BS-08-16-R03	.394"	1.260"	1.378"	CCMT 21.5_	6811235	9355333
6942236	BS-10-16-R03	.512"	1.378"	1.772"	CCMT 21.5_	6811250	9355333
6942237	BS-12-16-R03	.630"	1.496"	2.244"	CCMT 21.5_	6811250	9355333
6942238	BS-16-16-R04	.787"	1.692"	2.874"	CCMT 32.5_	6811260	9355555
6942239	BS-34-16-R04	1.496"	2.322"	3.228"	CCMT 32.5_	6811260	9355555
6921234	BS-2CT-R04 cartridge	2.204"	3.937"	.787"	CCMT 32.5_	6811260	9355555

BOHRSTAR 210 KIT - TRIANGULAR INSERTS

pg. 204 pg. 206 pg. 216 pg. 229

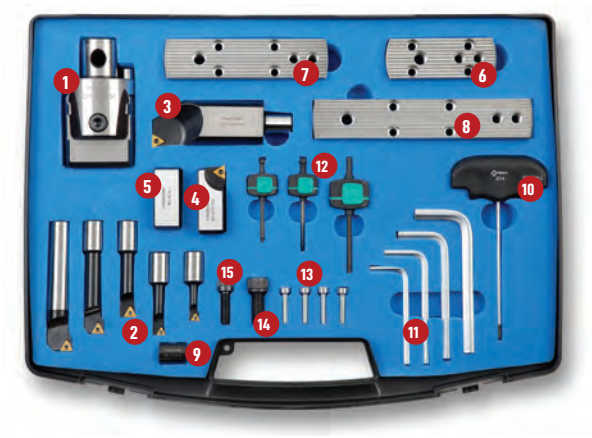

INCLUDES TRIANGULAR IN-SERTS:

- 2 Pcs. TCMT 1.21._
- 3 Pcs. TCMT 1.81._
- 2 Pcs. TCMT 32.5_

RANGE: 0.314" TO 8.27"

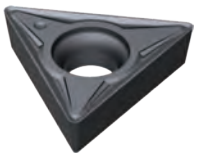

TCMT

Kit Part No.	Description	Range
6991240	BS-54-KIT-TC-8-210	0.314" – 8.27"

BOHRSTAR 210 KIT INCLUDES THESE COMPONENTS

	Part No.	Description	Length
1	6951234	BS-54-16-W head	2.560"
2	6943333	BS-06-16-T01 6mm bar	.984"
	6943334	BS-08-16-T01 8mm bar	1.378"
	6943335	BS-10-16-T02 10mm bar	1.772"
	6943336	BS-12-16-T02 12mm bar	2.244"
	6943337	BS-16-16-T02 16mm bar	2.874"
3	6943338	BS-34-16-T04 34mm bar	3.228"
4	6922243	BS-2CT-T04 cartridge	.787"
5	6921235	BS-2CW counterweight	.728"
6	6921236	BS-SP-85-130 small plate	.787"
7	6921237	BS-SP-123-170 medium plate	.787"
8	6921238	BS-SP-165-210 large plate	.787"

	Part No.	Description
9	6921239	BS-16-M10 location sleeve
10	6921243	A3 adjusting key
11	6962234	H4 hex wrench
	6962235	H5 hex wrench
	6962236	H6 hex wrench
	6962238	H8 hex wrench
12	6972236	T6 Torx wrench
	6972237	T7 Torx wrench
	6972215	T15 Torx wrench
13	6921240	D-27-21 plate fixing screws
14	6921241	CS-10-25 cartridge screw
15	6921242	CS-08-25 counterweight screw

KIT BORING BAR & INSERT SPECIFICATIONS

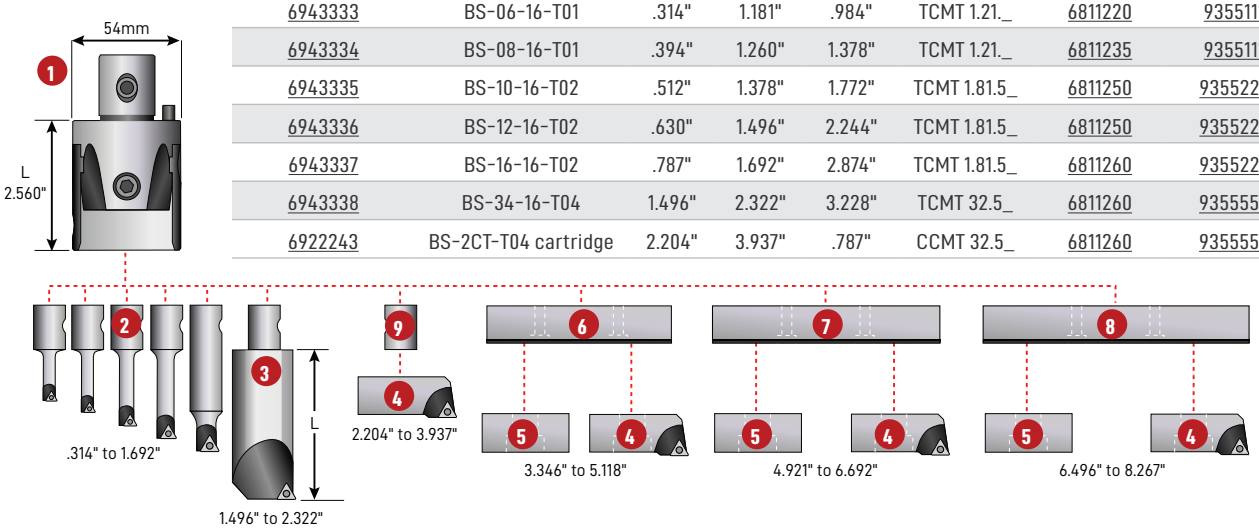

		Bore Range					
Boring Bar Part No.	Description	Min	Max	L	Insert	Insert Screw	Wrench
6943333	BS-06-16-T01	.314"	1.181"	.984"	TCMT 1.21._	6811220	9355111
6943334	BS-08-16-T01	.394"	1.260"	1.378"	TCMT 1.21._	6811235	9355111
6943335	BS-10-16-T02	.512"	1.378"	1.772"	TCMT 1.81.5_	6811250	9355222
6943336	BS-12-16-T02	.630"	1.496"	2.244"	TCMT 1.81.5_	6811250	9355222
6943337	BS-16-16-T02	.787"	1.692"	2.874"	TCMT 1.81.5_	6811260	9355222
6943338	BS-34-16-T04	1.496"	2.322"	3.228"	TCMT 32.5_	6811260	9355555
6922243	BS-2CT-T04 cartridge	2.204"	3.937"	.787"	CCMT 32.5_	6811260	9355555

BOHRSTAR 210 KITS - RHOMBIC INSERTS

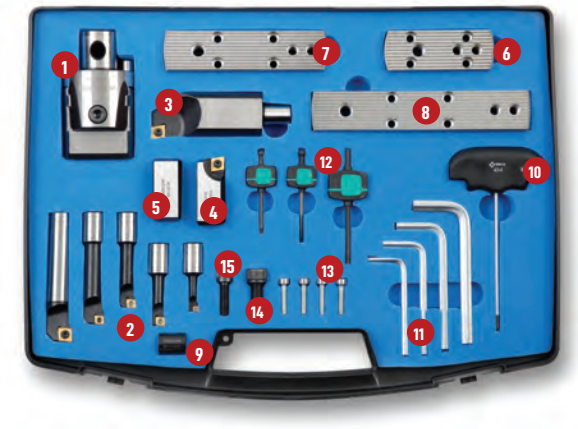

INCLUDES RHOMBIC INSERTS:

- 1 Pc. EPMT 1.5_
- 3 Pcs. CCMT 21.5_
- 3 Pcs. CCMT 32.5_

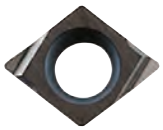
EPMT


CCMT

RANGE: 0.314" TO 8.27"

Kit Part No.	Description	Range
6991245	BS-54-KIT-RC-8-210	0.314" – 8.27"

BOHRSTAR 210 KIT INCLUDES THESE COMPONENTS

	Part No.	Description	Length
1	6951234	BS-54-16-W Head	2.560"
	6942234	BS-06-16-R02 6mm bar	.984"
	6942235	BS-08-16-R03 8mm bar	1.378"
2	6942236	BS-10-16-R03 10mm bar	1.772"
	6942237	BS-12-16-R03 12mm bar	2.244"
	6942238	BS-16-16-R04 16mm bar	2.874"
3	6942239	BS-34-16-R04 34mm bar	3.228"
4	6921234	BS-2CT-R04 Cartridge	.787"
5	6921235	BS-2CW Counterweight	.728"
6	6921236	BS-SP-85-130 Small plate	.787"
7	6921237	BS-SP-125-170 Medium plate	.787"
8	6921238	BS-SP-165-210 Large plate	.787"

	Part No.	Description
9	6921239	BS-16-M10 Location sleeve
10	6921243	A3 Adjusting key
	6962234	H4 hex wrench
	6962235	H5 hex wrench
11	6962236	H6 hex wrench
	6962238	H8 hex wrench
	6972238	T8 Torx wrench
12	6972237	T7 Torx wrench
	6972215	T15 Torx wrench
13	6921240	D-27-21 Plate fixing screws
14	6921241	CS-10-25 Cartridge screw
15	6921242	CS-08-25 Counterweight screw

KIT BORING BAR & INSERT SPECIFICATIONS

Boring Bar Part No.	Description	Bore Range Min	Bore Range Max	L	Insert	Insert Screw	Wrench
6942234	BS-06-16-R02	.314"	1.181"	.984"	EPMT 1.53._	6811220	9355222
6942235	BS-08-16-R03	.394"	1.260"	1.378"	CCMT 21.5_	6811235	9355333
6942236	BS-10-16-R03	.512"	1.378"	1.772"	CCMT 21.5_	6811250	9355333
6942237	BS-12-16-R03	.630"	1.496"	2.244"	CCMT 21.5_	6811250	9355333
6942238	BS-16-16-R04	.787"	1.692"	2.874"	CCMT 32.5_	6811260	9355555
6942239	BS-34-16-R04	1.496"	2.322"	3.228"	CCMT 32.5_	6811260	9355555
6921234	BS-2CT-R04 Cartridge	2.204"	3.937"	.787"	CCMT 32.5_	6811260	9355555

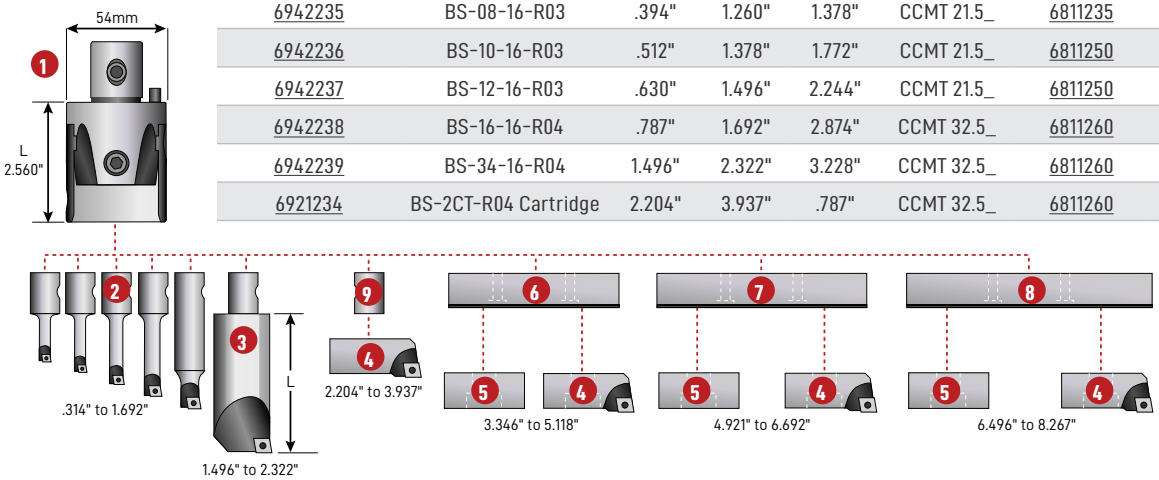

BOHRSTAR KIT MODULAR HOLDERS & ACCESSORIES

pg. 204 pg. 206 pg. 216 pg. 229

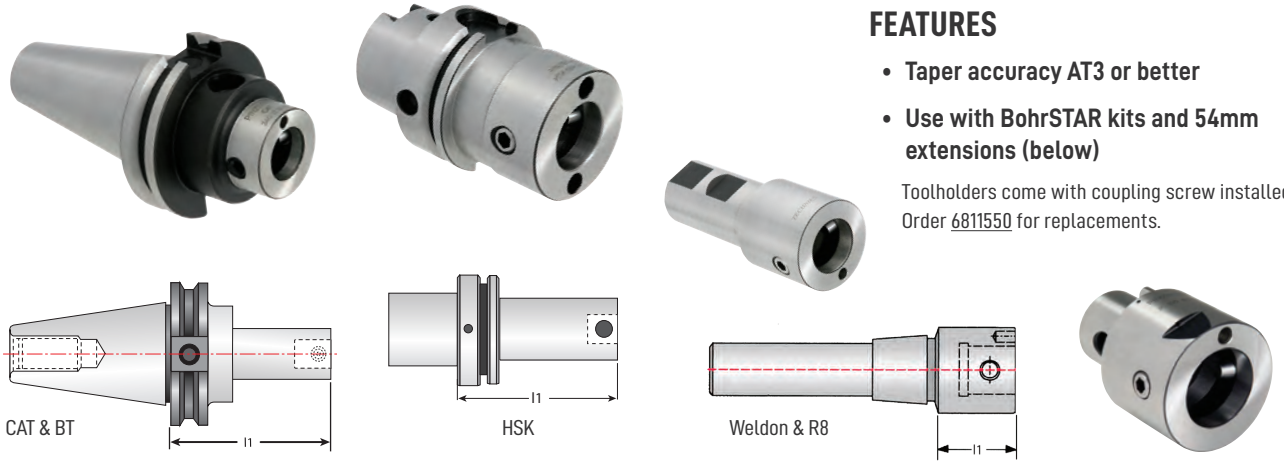

FEATURES

- Taper accuracy AT3 or better
- Use with BohrSTAR kits and 54mm extensions (below)

Toolholders come with coupling screw installed. Order 6811550 for replacements.

CAT40, CAT50, BT40 TOOLHOLDERS

Part No.	Spindle	Description	l1
6134310	CAT40	CT-340-54-120	3.00"
6134315	CAT40	CT-340-54-160	4.57"
6134320	CAT40	CT-340-54-200	6.14"
6141305	CAT50	CT-350-54-90	2.44"
6141310	CAT50	CT-350-54-160	5.20"
6141315	CAT50	CT-350-54-200	6.77"
6140400	BT40	BT-340-54-90	2.13"
6140425	BT40	BT-340-54-160	4.88"
6140450	BT40	BT-340-54-200	6.46"

BT50, HSK, WELDON, R8 TOOLHOLDERS

Part No.	Spindle	Description	l1
6150375	BT50	BT-350-54-90	2.56"
6150400	BT50	BT-350-54-160	5.31"
6150425	BT50	BT-350-54-200	6.90"
6155635	HSK63	HSK-63A-54-110	2.76"
6155105	HSK100	HSK-100A-54-110	2.76"
6165343	Weldon	B-20-54-110-3/4	0.75"
6165103	Weldon	B-25-54-110-1.0	1.00"
6165144	Weldon	B-32-54-110-1-1/4	1.25"
6165123	Weldon	B-40-54-110-1-1/2	1.50"
6165805	R8	R8-54-110	1.50"

EXTENSIONS

Part No.	Desc.	L
6555450	P-54-50	1.97"
6555475	P-54-75	2.95"

COOLANT EXTENSION

Part No.	Desc.	L
6565450	P-54-50R	1.97"

The coolant-thru spindle extension directs coolant to the cutting zone for optimal stock removal rates.

STOCK UP ON HIGH-PERFORMANCE LT1000 PVD INSERTS FOR BOHRSTAR KITS!

FEATURES

- LT1000 PVD is 14 microns thick! (3.5x thicker)
- 250% longer insert life
- Great for exotics and stainless



TRIANGULAR INSERTS FOR KITS

Part No.	Description	Grade
3533010	TCMT 1.2(1).50	5615
3533020	TCMT 1.2(1)1	5625
3563311	TCMT 1.8(1.5)0 HF	251
3533033	TCMT 1.8(1.5)1 HM	251
3563388	TCMT 1.8(1.5)2 HM	251
3563399	TCMT 1.8(1.5)1 HF	251
3533030	TCMT 1.8(1.5)1 PF4	5625
3564438	TCMT 3(2.5)1 NN	LT 10
3568851	TCMT 3(2.5)1 NN	LT 1000
3564441	TCMT 3(2.5)2 NN	LT 10
3568861	TCMT 3(2.5)2 NN	LT 1000

RHOMBIC INSERTS FOR KITS

Part No.	Description	Grade
3663311	CCMT 2(1.5)0 HF	251
3664411	CCMT 2(1.5)1 NN	LT 10
3668011	CCMT 2(1.5)1 NN	LT 1000
3663399	CCMT 2(1.5)2 HM	251
3663344	CCMT 3(2.5)0 HF	251
3664413	CCMT 3(2.5)1 NN	LT 10
3668021	CCMT 3(2.5)1 NN	LT 1000
3664416	CCMT 3(2.5)2 NN	LT 10
3668026	CCMT 3(2.5)2 NN	LT 1000
3934030	EPMT 1.5(3).5 PM5	5625

We recommend LT1000 or LT10 grade inserts for best performance and extended insert life.

PINZBOHR MODULAR BORING TOOLS

MODULAR BORING SYSTEM - RANGE: 8.661" TO 19.685"



PINZBOHR MODULAR SYSTEM

PinzBOHR is a flexible boring system for holes ranging from 0.315" up to 19.685".

The system includes all necessary extensions and reducers, rough heads, finish heads and even includes face mill arbors and end mill holder options.













MACROBOHR LARGE HOLE BORING SYSTEM

RANGE: FROM 8.661" TO 40.157""

The MacroBOHR boring system is a lightweight line of tools optimized for large diameter boring.

see page 219.

PINZBOHR MODULAR BORING SYSTEM

pg. 204 pg. 206 pg. 216 pg. 229



PinzBOHR boring heads are designed with insert pockets and cartridges that are integral with the body of the head to provide maximum rigidity and accuracy.

FEATURES:

- **Simple and extremely strong design for best reliability, rigidity, and repeatability.**
- **Flexible, modular system reduces tooling inventory.**
- **Top quality steel alloy hardened to 58-60 HRc.**
- **Precision ground components for highest accuracy.**

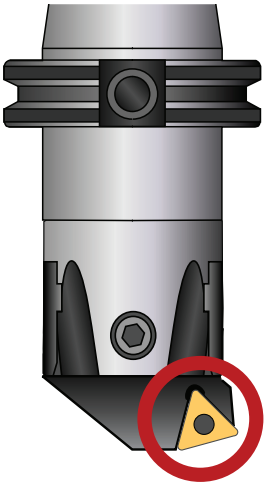

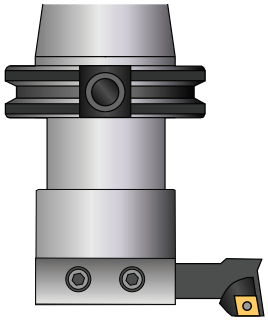

OTHER DESIGN #1

Bar extension design is an unbalanced, weak solution, extending from the side of the head. Extension is subject to vibration and deflection during cutting, reducing accuracy and shortening insert life.

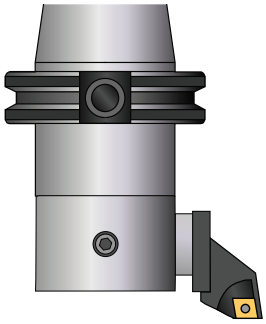

OTHER DESIGN #2

Dogleg variation extends beyond the body of the boring head, allowing vibration and deflection.

PRECISION

AccuSET graduated dial for fast and easy cutting adjustments in 0.0001" increments.



0.0001" graduated dial allows operators to quickly set the head to the necessary cutting diameter.

RIGIDITY

Two offset center lock screws apply maximum tightening force between the boring head and the toolholder.

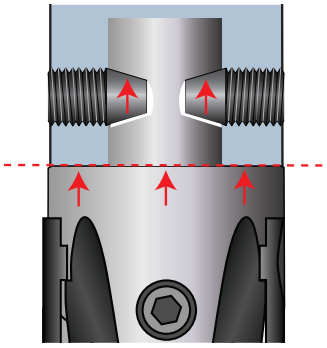

SIMPLICITY

SafetySET feature prevents damage to the adjustment screw.

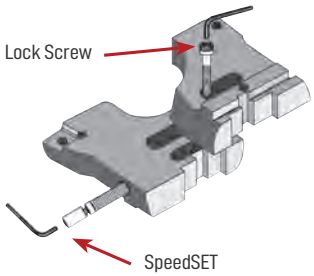

SpeedSET synchronized adjustment for setting of roughing heads.

PINZBOHR MODULAR BORING SYSTEM



MACROBOHR MODULAR BORING SYSTEM

MacroBOHR features a boring range from 8.661" up to 40.157 for large diameter boring.

USING 75˚ BORING HEADS

Use a 75-degree head for thru holes when the hole position is accurate. A 75-degree head will tend to follow a pre-existing hole. A 75-degree head can also be used when there is a lot of stock to be removed. The lead angle will allow higher feed rates.



75˚ Lead Angle Rough Head

USING 90˚ BORING HEADS

Use a 90-degree boring head when a hole is off-center, shifted, or off-angle. The 90-degree lead angle will have fewer tendencies to follow the existing hole. It is also used for blind or stepped holes and is the most versatile of our heads.

USING BORING BARS

The diameter of the boring bar should always be less than the diameter of the pre-existing hole to allow proper chip evacuation.

- 5:1 length-to-diameter ratios can be achieved when roughing with steel bars.
- 3:1 length-to-diameter ratios can be achieved when finishing with steel bars.
- 7:1 length-to-diameter ratios can be achieved with carbide bars.



90˚ Lead Angle Rough Head

THREE MAJOR INFLUENCES ON BORING

1. **Depth of Cut (D.O.C.)**
   To determine the depth of a cut, take the finish diameter, minus the starting diameter and divide by two (2). The D.O.C. should always be greater than or equal to the nose radius of the insert. This will produce a stable cut with axial cutting forces. When D.O.C. is less than the radius, the forces are radial, and can cause chatter and deflection.

2. **Feed Rate (IPR)**
   Feeds and speeds are always dependent upon material, machine, setup conditions (fixturing) and tool over-hang. The feed rate (IPR) should always be larger than the hone of the insert and at least 25% of the nose radius. This allows full use of the chip breaker. An IPR less than the hone will produce vibration, which will affect the tool life and surface finish.



Carbide or HSS Boring Bars

3. **Speed (SFPM)**
   Speed is the function of coating, nose radius, and over-hang. Higher speeds typically produce a better finish, shorter cycling times and better chip evacuation. Lower speed reduces the possibility of chatter, but also has higher cycle times and poorer quality finishes. This can also cause a built-up edge and reduce insert life. Sometimes coatings can be used to run higher surface footage, create better finish, and limit built-up edges.



Use Micro Heads with Boring Bars



FEATURES

- **AccuSET 0.0001" graduated dial allows fast and easy adjustments**
- **Tapered nose improves clearance**
- **Two offset center lock screws maximize rigidity while still permitting fast tool changes**

Micro Heads available in five shank sizes for carbide and HSS boring bars.

Select a micro head with a "d2" dimension that matches the "d2" of the boring bar.

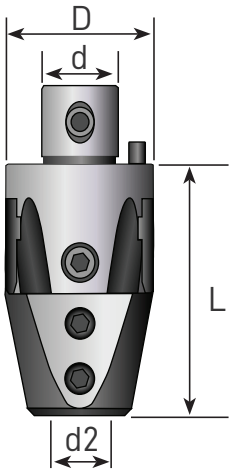

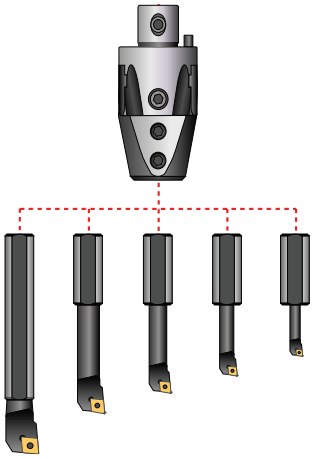

EASY ADJUSTMENT

AccuSET graduated adjustment dial



Adjustable in 0.0001" increments

Metric dials available

0.0001" dial allows operators to quickly set the finish head to any diameter.

PROCEDURE:

1. **Loosen locking screw**
2. **Remove any backlash**
3. **Rotate scale to desired setting**
4. **Tighten locking screw**

ACCUSET MICRO HEADS

		Range					
Part No.	Description	Min	Max	D (mm)	d (mm)	d2 (mm)	L
6011000	A-27-006	.315"	.787"	27	15	6	1.97"
6011050	A-27-008	.394"	.827"	27	15	8	1.97"
6011100	A-32-008	.394"	.827"	32	18	8	2.28"
6011150	A-32-010	.512"	.984"	32	18	10	2.28"
6011200	A-42-010	.512"	1.142"	42	24	10	2.76"
6011250	A-42-012	.63"	1.339"	42	24	12	2.76"
6011300	A-42-016	.787"	1.496"	42	24	16	2.76"

Note: All wrenches are included with each boring head. No special tools are needed.

BORING BARS FOR MICRO HEADS

pg. 204 pg. 206 pg. 216 pg. 229



Select a boring bar with a "d2" dimension that matches the "d2" of the head.

FEATURES

- **16mm shanks for A-42-016 micro head**
- **Manufactured from HSS or Carbide**
- **Precision ground shank**

Boring Bars for

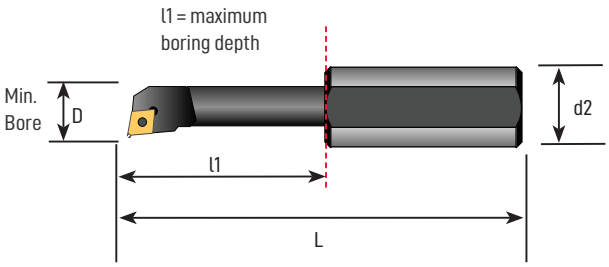

5:1 length-to-diameter ratios can be achieved when roughing with steel bars.
3:1 length-to-diameter ratios can be achieved when finishing with steel bars.

The shortest bar overhang possible should be used to maximize results.

HSS BORING BARS FOR MICRO HEAD A-42-016

Part No.	Description	D Min. Bore	d2 (mm)	L	l1	Insert	Screw	Wrench
6711225	S06-16SELPR-04	.315"	16	2.598"	.984"	EPGT 1.21._L	6811210	9355111
6711235	S06-16SELPR-05	.315"	16	2.598"	.984"	EPMT 1.53._	6811220	9355111
6722225	S06-16STFCR-06	.315"	16	2.598"	.984"	TCMT 1.21._	6811215	9355111
6711245	S08-16SCLCR-06	.394"	16	2.992"	1.377"	CCMT 21.5_	6811235	9355222
6722235	S08-16STFCR-06	.394"	16	2.992"	1.377"	TCMT 1.21._	6811215	9355111
6711255	S10-16SCLCR-06	.512"	16	3.386"	1.771"	CCMT 21.5_	6811250	9355222
6722245	S10-16STFCR-09	.512"	16	3.386"	1.771"	TCMT 1.81.5_	6811230	9355222
6711265	S12-16SCLCR-06	.630"	16	3.858"	2.244"	CCMT 21.5_	6811255	9355222
6722255	S12-16STFCR-09	.630"	16	3.858"	2.244"	TCMT 1.81.5_	6811230	9355222
6711275	S16-16SCLCR-09	.787"	16	4.488"	2.874"	CCMT 32.5_	6811260	9355555
6722265	S16-16STFCR-09	.787"	16	4.488"	2.874"	TCMT 1.81.5_	6811230	9355222
6722275	S16-16STFCR-16	.787"	16	4.488"	2.874"	TCMT 32.5_	6811260	9355555

CARBIDE BORING BAR FOR MICRO HEAD A-42-016

Part No.	Description	D Min. Bore	d2 (mm)	L	l1	Insert	Screw	Wrench
6733265	C16L-SCLCR-09	.787"	16	5.512"	4.409"	CCMT 32.5_	6811260	T15

BORING BARS FOR MICRO HEADS



FEATURES

- Minimum bore .315"
- Maximum bore 1.496"
- Carbide or HSS

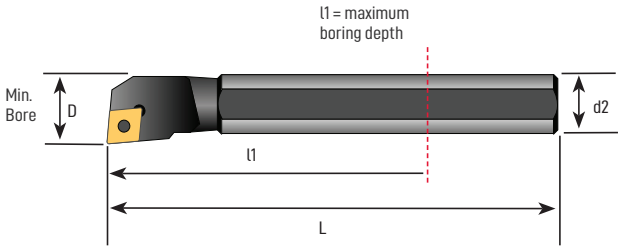

Select a boring bar with a "d2" dimension that matches the "d2" of the head.

USAGE

- 7:1 length-to-diameter ratios can be achieved with carbide bars
- 5:1 for roughing with steel bars
- 3:1 for finishing with steel bars

CARBIDE SHANK BORING BARS

Part No.	Description	Micro Head	Min. Bore	d2	L	l1	Insert	Screw	Wrench
6733225	C06F-SELPR-04	A-27-006	.315"	6mm	3.150"	2.204"	EPGT1.21._L	6811210	T6
6733230	C06-08H-SELPR-05	A-27-008 or A-32-008	.315"	8mm	3.150"	2.204"	EMPT1.53._	6811210	T6
6733235	C08G-SCLCR-06	A-27-008 or A-32-008	.394"	8mm	3.543"	2.362"	CCMT21.5_	6811235	T7
6733245	C10J-SCLCR-06	A-32-010 or A-42-010	.512"	10mm	4.331"	2.913"	CCMT21.5_	6811250	T7
6733255	C12K-SCLCR-06	A-42-012	.630"	12mm	4.921"	3.503"	CCMT21.5_	6811255	T7
6733265	C16L-SCLCR-09	A-42-016	.787"	16mm	5.512"	4.094"	CCMT32.5_	6811260	T15

HSS SHANK BORING BARS

Part No.	Description	Micro Head	Min. Bore	d2	L	l1	Insert	Screw	Wrench
6733227	S06E-SELPR-04	A-27-006	.315"	6mm	2.756"	1.811"	EPGT1.21._L	6811210	T6
6733232	S06E-SELPR-05	A-27-006	.315"	6mm	2.756"	1.811"	EMPT1.53._	6811210	T6
6733237	S08F-SCLCR-06	A-27-008 or A32-008	.394"	8mm	3.150"	1.968"	CCMT21.5_	6811235	T7
6733247	S10G-SCLCR-06	A-32-010 or A42-010	.512"	10mm	3.543"	2.125"	CCMT21.5_	6811250	T7
6733257	S12H-SCLCR-06	A-42-012	.630"	12mm	3.937"	2.519"	CCMT21.5_	6811255	T7
6733267	S16J-SCLCR-09	A-42-016	.787"	16mm	4.331"	2.913"	CCMT32.5_	6811260	T15

75° LEAD ANGLE ROUGHING HEADS

pg. 204 pg. 206 pg. 216 pg. 229



Integral pocket type



Cartridge type rough head

FEATURES

- SpeedSET feature adjusts both sides at the same time
- SafetySET feature prevents accidental damage to the adjustment screw
- Two insert pockets for faster cutting

RANGE: .945" TO 8.661"

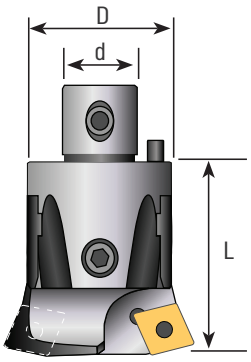

75° ROUGHING HEADS INTEGRAL POCKET TYPE

Part No.	Description	Range Min	Range Max	D (mm)	d (mm)	L	Insert	Screw
6275100	D-22-75-400	.945"	1.181"	22	12	1.39"	CCMT 21.5_	6811250
6275105	D-27-75-409	1.142"	1.575"	27	15	1.65"	CCMT 32.5_	6811260
6275115	D-32-75-409	1.535"	1.969"	32	18	1.77"	CCMT 32.5_	6811260
6275120	D-42-75-300	1.929"	2.559"	42	24	2.20"	TCMT 1.81._	6811262
6275125	D-42-75-402	1.929"	2.559"	42	24	2.20"	CCMT 43_	6811266
6275130	D-42-75-402N	2.087"	2.559"	42	24	2.20"	CNMG 43_	6811270
6275135	D-54-75-300	2.48"	3.228"	54	28	2.60"	TCMT 1.81._	6811262
6275140	D-54-75-402	2.48"	3.228"	54	28	2.60"	CCMT 43_	6811 266
6275145	D-54-75-402N	2.48"	3.228"	54	28	2.60"	CNMG 43_	6811270

75° ROUGHING HEADS CARTRIDGE TYPE

Part No.	Description	Range Min	Range Max	Cartridge	D (mm)	d (mm)	L	Insert	Screw
6275150	D-68-75-2CT-300	3.15"	4.016"	2CT-75-300	68	36	3.39"	TCMT 1.81.5_	6811262
6275155	D-68-75-2CT-402	3.15"	4.016"	2CT-75-402	68	36	3.39"	CCMT 43_	6811266
6275160	D-68-75-2CT-402N	3.15"	4.016"	2CT-75-402N	68	36	3.39"	CNMG 43_	6811270
6275165	D-85-75-3CT-300	3.937"	4.921"	3CT-75-300	85	50	3.94"	TCMT 32.5_	6811262
6275170	D-85-75-3CT-402	3.937"	4.921"	3CT-75-402	85	50	3.94"	CCMT 43_	6811266
6275175	D-85-75-3CT-402N	3.937"	4.921"	3CT-75-402N	85	50	3.94"	CNMG 43_	6811270
6275180	D-100-75-3CT-300	4.921"	6.299"	3CT-75-300	110	60	3.94"	TCMT 32.5_	6811262
6275185	D-100-75-3CT-402	4.921"	6.299"	3CT-75-402	110	60	3.94"	CCMT 43_	6811266
6275190	D-100-75-3CT-402N	4.921"	6.299"	3CT-75-402N	110	60	3.94"	CNMG 43_	6811270
6275195	D-200-75-3CT-300	6.299"	8.661"	2CT-75-300	145	60	3.94"	TCMT 32.5_	6811262
6275200	D-200-75-3CT-402	6.299"	8.661"	3CT-75-402	145	60	3.94"	CCMT 43_	6811266
6275205	D-200-75-3CT-402N	6.299"	8.661"	3CT-75-402N	145	60	3.94"	CNMG 432_	6811270

AccuSET dial not available on small rough heads due to their design differences.

75° LEAD ANGLE ROUGHING HEADS



SafetySET feature not available on large boring heads due to their design differences.

FEATURES

- **Two AccuSET graduated dials for easy adjustments in 0.0001" increments**
- **Top quality steel alloy hardened to 58-60 HRc**
- **Precision ground components for accuracy**

RANGE: 8.661" TO 19.685"

75° lead angle head tends to self-center in the pilot hole, stabilizing the cut and maximizing stock removal rates.

EASY ADJUSTMENT

AccuSET graduated adjustment dial

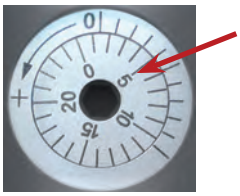

Adjustable in 0.0001" increments

Metric dials available

0.0001" dial allows operators to quickly set the finish head to any diameter.

PROCEDURE:

1. **Loosen locking screw**
2. **Remove any backlash**
3. **Rotate scale to desired setting**
4. **Tighten locking screw**



Use large boring heads with direct mount toolholders or ADT 100-50 adapter and a toolholder with a 100mm connection.

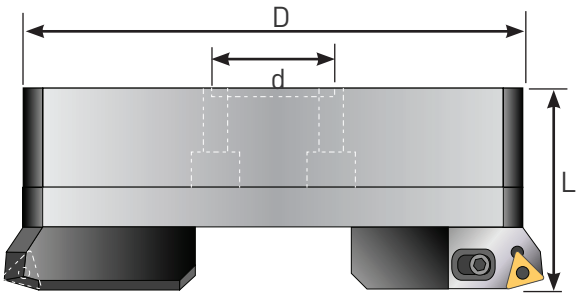

75° LARGE ROUGHING HEADS

Part No.	Description	Range Min	Range Max	Cartridge	D (mm)	d (mm)	L	Insert	Screw
6275210	D-300-75-3CT-300	8.661"	12.598"	3CT-75-300	202	60	3.54"	TCMT 32.5_	6811262
6275215	D-300-75-3CT-402	8.661"	12.598"	3CT-75-402	202	60	3.54"	CCMT 43_	6811266
6275220	D-300-75-3CT-402N	8.661"	12.598"	3CT-75-402N	202	60	3.54"	CNMG 43_	6811270
6275225	D-400-75-3CT-300	11.417"	15.748"	3CT-75-300	272	60	3.54"	TCMT 32.5_	6811262
6275230	D-400-75-3CT-402	11.417"	15.748"	3CT-75-402	272	60	3.54"	CCMT 43_	6811266
6275235	D-400-75-3CT-402N	11.417"	15.748"	3CT-75-402N	272	60	3.54"	CNMG 43_	6811270
6275240	D-500-75-3CT-300	14.567"	19.685"	3CT-75-300	352	60	3.54"	TCMT 32.5_	6811262
6275245	D-500-75-3CT-402	14.567"	19.685"	3CT-75-402	352	60	3.54"	CCMT 43_	6811266
6275250	D-500-75-3CT-402N	14.567"	19.685"	3CT-75-402N	352	60	3.54"	CNMG 43_	6811270

SafetySET feature not available on large boring heads due to their design differences.

90° LEAD ANGLE ROUGHING HEADS

pg. 204 pg. 206 pg. 216 pg. 229



Integral pocket type



Cartridge type rough head

FEATURES

- SpeedSET feature adjusts both sides at the same time
- SafetySET feature prevents accidental damage to the adjustment screw
- Two insert pockets for faster cutting

RANGE: .945" TO 8.661"

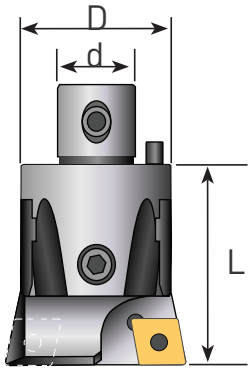

90° ROUGHING HEADS INTEGRAL POCKET TYPE

Part No.	Description	Range Min	Range Max	D (mm)	d (mm)	L	Insert	Screw
6390100	D-22-90-400	.945"	1.181"	22	12	1.39"	CCMT 21.5_	6811250
6390105	D-27-90-409	1.142"	1.575"	27	15	1.65"	CCMT 32.5_	6811260
6390110	D-32-90-409	1.535"	1.969"	32	18	1.77"	CCMT 32.5_	6811260
6390115	D-42-90-300	1.929"	2.559"	42	24	2.20"	TCMT 32.5_	6811262
6390120	D-42-90-402	1.929"	2.559"	42	24	2.20"	CCMT 43_	6811266
6390125	D-42-90-402N	2.087"	2.559"	42	24	2.20"	CNMG 43_	6811270
6390130	D-54-90-300	2.48"	3.228"	54	28	2.60"	TCMT 32.5_	6811262
6390135	D-54-90-402	2.48"	3.228"	54	28	2.60"	CCMT 43_	6811266
6390140	D-54-90-402N	2.48"	3.228"	54	28	2.60"	CNMG 43_	6811270

90° ROUGHING HEADS CARTRIDGE TYPE

Part No.	Description	Range Min	Range Max	Cartridge	D (mm)	d (mm)	L	Insert	Screw
6390145	D-68-90-2CT-300	3.15"	4.016"	2CT-90-300	68	36	3.39"	TCMT 32.5_	6811262
6390150	D-68-90-2CT-402	3.15"	4.016"	2CT-90-402	68	36	3.39"	CCMT 43_	6811266
6390155	D-68-90-2CT-402N	3.15"	4.016"	2CT-90-402N	68	36	3.39"	CNMG 43_	6811270
6390160	D-85-90-3CT-300	3.937"	4.921"	3CT-90-300	85	50	3.94"	TCMT 32.5_	6811262
6390165	D-85-90-3CT-402	3.937"	4.921"	3CT-90-402	85	50	3.94"	CCMT 43_	6811266
6390170	D-85-90-3CT-402N	3.937"	4.921"	3CT-90-402N	85	50	3.94"	CNMG 43_	6811270
6390175	D-100-90-3CT-300	4.921"	6.299"	3CT-90-300	110	60	3.94"	TCMT 32.5_	6811262
6390180	D-100-90-3CT-402	4.921"	6.299"	3CT-90-402	110	60	3.94"	CCMT 43_	6811266
6390185	D-100-90-3CT-402N	4.921"	6.299"	3CT-90-402N	110	60	3.94"	CNMG 43_	6811270
6390190	D-200-90-3CT-300	6.299"	8.661"	2CT-90-300	145	60	3.94"	TCMT 32.5_	6811262
6390200	D-200-90-3CT-402	6.299"	8.661"	3CT-90-402	145	60	3.94"	CCMT 43_	6811266
6390205	D-200-90-3CT-402N	6.299"	8.661"	3CT-90-402N	145	60	3.94"	CNMG 43_	6811270

AccuSET feature not available on small boring heads due to their design differences.

90° LEAD ANGLE ROUGHING HEADS



SafetySET feature not available on large boring heads due to their design differences.

FEATURES

- **Two AccuSET graduated dials for easy adjustments in 0.0001" increments**
- **Top quality steel alloy hardened to 58-60 HRc**
- **Precision ground components for accuracy**

RANGE: 8.661" TO 19.685"

Use 90° lead angle heads when performing blind boring, or if the desired hole is not exactly on center with your pilot hole. The 90° lead will have less tendency to follow the pilot hole.

EASY ADJUSTMENT

AccuSET graduated adjustment dial



Adjustable in 0.0001" increments

Metric dials available

0.0001" dial allows operators to quickly set the finish head to any diameter.

PROCEDURE:

1. **Loosen locking screw**
2. **Remove any backlash**
3. **Rotate scale to desired setting**
4. **Tighten locking screw**



Use large boring heads with direct mount toolholders or ADT 100-50 adapter and a toolholder with a 100mm connection.

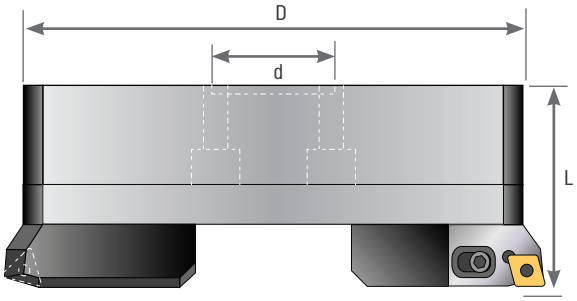

90° LARGE ROUGHING HEADS

Part No.	Description	Range Min	Range Max	Cartridge	D (mm)	d (mm)	L	Insert	Screw
6390210	D-300-90-3CT-300	8.661"	12.598"	3CT-90-300	202	60	3.54"	TCMT 32.5_	6811262
6390215	D-300-90-3CT-402	8.661"	12.598"	3CT-90-402	202	60	3.54"	CCMT 43_	6811266
6390220	D-300-90-3CT-402N	8.661"	12.598"	3CT-90-402N	202	60	3.54"	CNMG 43_	6811270
6390225	D-400-90-3CT-300	11.417"	15.748"	3CT-90-300	272	60	3.54"	TCMT 32.5_	6811262
6390230	D-400-90-3CT-402	11.417"	15.748"	3CT-90-402	272	60	3.54"	CCMT 43_	6811266
6390235	D-400-90-3CT-402N	11.417"	15.748"	3CT-90-402N	272	60	3.54"	CNMG 43_	6811270
6390240	D-500-90-3CT-300	14.567"	19.685"	3CT-90-300	352	60	3.54"	TCMT 32.5_	6811262
6390245	D-500-90-3CT-402	14.567"	19.685"	3CT-90-402	352	60	3.54"	CCMT 43_	6811266
6390250	D-500-90-3CT-402N	14.567"	19.685"	3CT-90-402N	352	60	3.54"	CNMG 43_	6811270

SafetySET feature not available on large boring heads due to their design differences.

75° LEAD ANGLE FINISHING HEADS

pg. 204 pg. 206 pg. 216 pg. 229



Integral pocket type



Cartridge type

FEATURES

- AccuSET slide includes graduated dial for fast adjustments in 0.0001" increments
- Manufactured from top quality steel alloy, hardened to 58-60 HRc to minimize wear
- Pin-and-taper coupling system ensures maximum rigidity

RANGE: .945" TO 8.661"

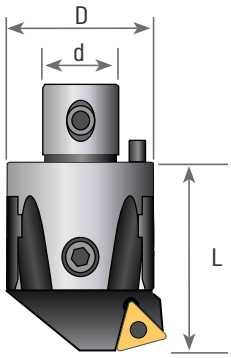

75° FINISHING HEADS INTEGRAL POCKET TYPE

Part No.	Description	Range Min	Range Max	D (mm)	d (mm)	L	Insert	Screw
6275255	A-22-75-400	.945"	1.181"	22	12	1.39"	CCMT 21.5_	6811250
6275260	A-27-75-409	1.142"	1.575"	27	15	1.65"	CCMT 32.5_	6811260
6275265	A-32-75-409	1.535"	1.969"	32	18	1.77"	CCMT 32.5_	6811260
6275270	A-42-75-300	1.929"	2.559"	42	24	2.20"	TCMT 32.5_	6811262
6275275	A-54-75-300	2.48"	3.228"	54	28	2.60"	TCMT 32.5_	6811262

75° FINISHING HEADS CARTRIDGE TYPE

Part No.	Description	Range Min	Range Max	Cartridge	D (mm)	d (mm)	L	Insert	Screw
6275280	A-68-75-2CT-300	3.15"	4.016"	2CT-75-300	68	36	3.39"	TCMT 32.5_	6811262
6275285	A-68-75-2CT-402	3.15"	4.016"	2CT-75-402	68	36	3.39"	CCMT 43_	6811266
6275290	A-68-75-2CT-402N	3.15"	4.016"	2CT-75-402N	68	36	3.39"	CNMG 43_	6811270
6275295	A-85-75-3CT-300	3.937"	4.921"	3CT-75-300	85	50	3.94"	TCMT 32.5_	6811262
6275300	A-85-75-3CT-402	3.937"	4.921"	3CT-75-402	85	50	3.94"	CCMT 43_	6811266
6275305	A-85-75-3CT-402N	3.937"	4.921"	3CT-75-402N	85	50	3.94"	CNMG 43_	6811270
6275310	A-100-75-3CT-300	4.921"	6.299"	3CT-75-300	110	60	3.94"	TCMT 32.5_	6811262
6275315	A-100-75-3CT-402	4.921"	6.299"	3CT-75-402	110	60	3.94"	CCMT 43_	6811266
6275320	A-100-75-3CT-402N	4.921"	6.299"	3CT-75-402N	110	60	3.94"	CNMG 43_	6811270
6275325	A-200-75-3CT-300	6.299"	8.661"	2CT-75-300	145	60	3.94"	TCMT 32.5_	6811262
6275330	A-200-75-3CT-402	6.299"	8.661"	3CT-75-402	145	60	3.94"	CCMT 43_	6811266
6275335	A-200-75-3CT-402N	6.299"	8.661"	3CT-75-402N	145	60	3.94"	CNMG 43_	6811270

75° LEAD ANGLE FINISHING HEADS



FEATURES

- AccuSET 0.0001" graduated dial for precision adjustments
- Designed for maximum rigidity and accuracy
- Top quality steel alloy hardened to 58-60 HRc

RANGE: 8.661" TO 19.685"

75° lead angle head tends to self-center in the pilot hole, stabilizing the cut and maximizing stock removal rates.

EASY ADJUSTMENT

AccuSET graduated adjustment dial.



Adjustable in 0.0001" increments

Metric dials available

0.0001" dial allows operators to quickly set the finish head to any diameter.

PROCEDURE:

1. Loosen locking screw
2. Remove any backlash
3. Rotate scale to desired setting
4. Tighten locking screw



Use large boring heads with direct mount toolholders or ADT 100-50 adapter and a toolholder with a 100mm connection.

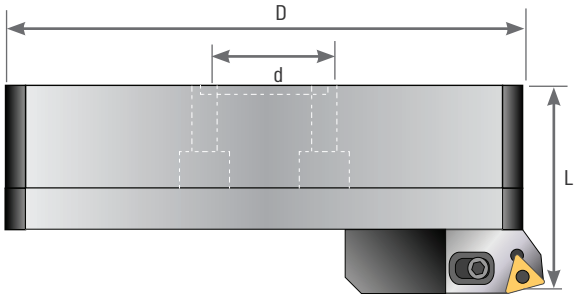

75° LARGE FINISHING HEADS

Part No.	Description	Range Min	Range Max	Cartridge	D (mm)	d (mm)	L	Insert	Screw
6275340	A-300-75-3CT-300	8.661"	12.598"	3CT.75.300	202	60	3.54"	TCMT 32.5_	6811262
6275345	A-300-75-3CT-402	8.661"	12.598"	3CT.75.402	202	60	3.54"	CCMT 43_	6811266
6275350	A-300-75-3CT-402N	8.661"	12.598"	3CT.75.402N	202	60	3.54"	CNMG 43_	6811270
6275355	A-400-75-3CT-300	11.417"	15.748"	3CT.75.300	272	60	3.54"	TCMT 32.5_	6811262
6275360	A-400-75-3CT-402	11.417"	15.748"	3CT.75.402	272	60	3.54"	CCMT 43_	6811266
6275365	A-400-75-3CT-402N	11.417"	15.748"	3CT.75.402N	272	60	3.54"	CNMG 43_	6811270
6275370	A-500-75-3CT-300	14.567"	19.685"	3CT.75.300	352	60	3.54"	TCMT 32.5_	6811262
6275375	A-500-75-3CT-402	14.567"	19.685"	3CT.75.402	352	60	3.54"	CCMT 43_	6811266
6275380	A-500-75-3CT-402N	14.567"	19.685"	3CT.75.402N	352	60	3.54"	CNMG 43_	6811270

90° LEAD ANGLE FINISHING HEADS

pg. 204 pg. 206 pg. 216 pg. 229



Integral pocket type



Cartridge type

FEATURES

- AccuSET slide includes graduated dial for fast adjustments in 0.0001" increments
- Manufactured from top quality steel alloy, hardened to 58-60 HRc to minimize wear
- Pin-and-taper coupling system ensures maximum rigidity

RANGE: .945" TO 8.661"

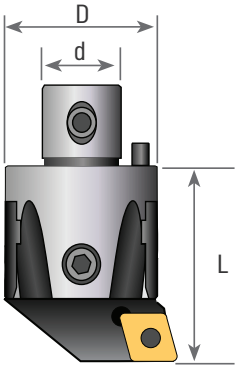

90° FINISHING HEADS INTEGRAL POCKET TYPE

Part No.	Description	Range Min	Range Max	D (mm)	d (mm)	L	Insert	Screw
6390255	A-22-90-400	.945"	1.181"	22	12	1.39"	CCMT 21.5_	6811250
6390260	A-27-90-409	1.142"	1.575"	27	15	1.65"	CCMT 32.5_	6811260
6390265	A-32-90-300	1.535"	1.969"	32	18	1.77"	TCMT 32.5_	6811262
6390270	A-32-90-409	1.535"	1.969"	32	18	1.77"	CCMT 32.5_	6811260
6390275	A-42-90-300	1.929"	2.559"	42	24	2.20"	TCMT 32.5_	6811262
6390280	A-42-90-402	1.929"	2.559"	42	24	2.20"	CCMT 43_	6811266
6390285	A-42-90-402N	2.087"	2.559"	42	24	2.20"	CNMG 43_	6811270
6390290	A-54-90-300	2.48"	3.228"	54	28	2.60"	TCMT 32.5_	6811262
6390295	A-54-90-402	2.48"	3.228"	54	28	2.60"	CCMT 43_	6811266
6390300	A-54-90-402N	2.48"	3.228"	54	28	2.60"	CNMG 43_	6811270

90° FINISHING HEADS CARTRIDGE TYPE

Part No.	Description	Range Min	Range Max	Cartridge	D (mm)	d (mm)	L	Insert	Screw
6390305	A-68-90-2CT-300	3.15"	4.016"	2CT-90-300	68	36	3.39"	TCMT 32.5_	6811262
6390310	A-68-90-2CT-402	3.15"	4.016"	2CT-90-402	68	36	3.39"	CCMT 43_	6811266
6390315	A-68-90-2CT-402N	3.15"	4.016"	2CT-90-402N	68	36	3.39"	CNMG 43_	6811270
6390320	A-85-90-3CT-300	3.937"	4.921"	3CT-90-300	85	50	3.94"	TCMT 32.5_	6811262
6390325	A-85-90-3CT-402	3.937"	4.921"	3CT-90-402	85	50	3.94"	CCMT 43_	6811266
6390330	A-85-90-3CT-402N	3.937"	4.921"	3CT-90-402N	85	50	3.94"	CNMG 43_	6811270
6390335	A-100-90-3CT-300	4.921"	6.299"	3CT-90-300	110	60	3.94"	TCMT 32._	6811262
6390340	A-100-90-3CT-402	4.921"	6.299"	3CT-90-402	110	60	3.94"	CCMT 43_	6811266
6390345	A-100-90-3CT-402N	4.921"	6.299"	3CT-90-402N	110	60	3.94"	CNMG 43_	6811270
6390350	A-200-90-3CT-300	6.299"	8.661"	2CT-90-300	145	60	3.94"	TCMT 32.5_	6811262
6390355	A-200-90-3CT-402	6.299"	8.661"	3CT-90-402	145	60	3.94"	CCMT 43_	6811266
6390360	A-200-90-3CT-402N	6.299"	8.661"	3CT-90-402N	145	60	3.94"	CNMG 43_	6811270

90° LEAD ANGLE FINISHING HEADS



FEATURES

- **AccuSET 0.0001" graduated dial for precision adjustments**
- **Designed for maximum rigidity and accuracy**
- **Top quality steel alloy hardened to 58-60 HRc**

RANGE: 8.661" TO 19.685"

Use 90° lead angle heads when performing blind boring, or if the desired hole is not exactly on center with your pilot hole. The 90° lead will have less tendency to follow the pilot hole.

EASY ADJUSTMENT

AccuSET graduated adjustment dial.



Adjustable in 0.0001" increments

Metric dials available

0.0001" dial allows operators to quickly set the finish head to any diameter.

PROCEDURE:

1. **Loosen locking screw**
2. **Remove any backlash**
3. **Rotate scale to desired setting**
4. **Tighten locking screw**



Use large boring heads with direct mount toolholders or ADT 100-50 adapter and a toolholder with a 100mm connection.

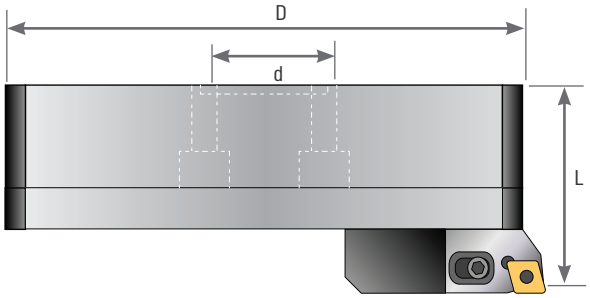

90° LARGE FINISHING HEADS

Part No.	Description	Range Min	Range Max	Cartridge	D (mm)	d (mm)	L	Insert	Screw
6390365	A-300-90-3CT-300	8.661"	12.598"	3CT-90-300	202	60	3.54"	TCMT 32.5_	6811262
6390370	A-300-90-3CT-402	8.661"	12.598"	3CT-90-402	202	60	3.54"	CCMT 43_	6811266
6390375	A-300-90-3CT-402N	8.661"	12.598"	3CT-90-402N	202	60	3.54"	CNMG 43_	6811270
6390380	A-400-90-3CT-300	11.417"	15.748"	3CT-90-300	272	60	3.54"	TCMT 32.5_	6811262
6390385	A-400-90-3CT-402	11.417"	15.748"	3CT-90-402	272	60	3.54"	CCMT 43_	6811266
6390390	A-400-90-3CT-402N	11.417"	15.748"	3CT-90-402N	272	60	3.54"	CNMG 43_	6811270
6390395	A-500-90-3CT-300	14.567"	19.685"	3CT-90-300	352	60	3.54"	TCMT 32.5_	6811262
6390400	A-500-90-3CT-402	14.567"	19.685"	3CT-90-402	352	60	3.54"	CCMT 43_	6811266
6390405	A-500-90-3CT-402N	14.567"	19.685"	3CT-90-402N	352	60	3.54"	CNMG 43_	6811270

75° ULTRAFINE FINISHING HEADS

pg. 204 pg. 206 pg. 216 pg. 229



Uses ISO standard inserts

UltraFINE finish heads feature an 11° relief angle that provides an ultra-smooth finish, reducing the need for extra operations.

FEATURES

- **AccuSET slide includes graduated dial for fast adjustments in 0.0001" increments**
- **Manufactured from top quality steel alloy, hardened to 58-60 HRc to minimize wear**
- **Pin-and-taper coupling system ensures maximum rigidity**

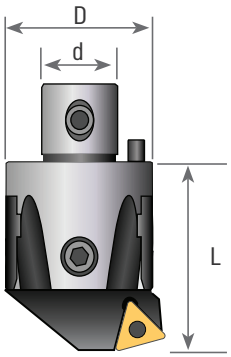

75° ULTRAFINE FINISHING HEADS INTEGRAL POCKET TYPE

Part No.	Description	Min	Max	D	d	L	Insert	Screw
6275253	A-22-75-310 W	.945"	1.181"	22	12	1.39"	TP_1.8(1.5)	6811250
6275258	A-27-75-310 W	1.142"	1.575"	27	15	1.65"	TP_1.8(1.5)	6811260
6275263	A-32-75-310 W	1.535"	1.969"	32	18	1.77"	TP_1.8(1.5)	6811260
6275271	A-42-75-311 W	1.929"	2.559"	42	24	2.20"	TP_221	6811262
6275276	A-54-75-311 W	2.48"	3.228"	54	28	2.59"	TP_221	6811262

75° ULTRAFINE FINISHING HEADS CARTRIDGE TYPE

Part No.	Description	Min	Max	D	d	L	Cartridge	Screw
6275281	A-68-75-2CT-311 W	3.15"	4.016"	68	36	3.39"	2CT 75 311	6811262
6275296	A-85-75-3CT-311 W	3.94"	4.921"	85	50	3.94"	3CT 75 311	6811266
6275311	A-100-75-3CT-311 W	4.92"	6.299"	110	60	3.94"	3CT 75 311	6811270
6275326	A-200-75-3CT-311 W	6.29"	8.66"	145	60	3.94"	3CT 75 311	6811262

75° ULTRAFINE LARGE FINISHING HEADS

Part No.	Description	Min	Max	D	d	L	Cartridge	Screw
6275341	A-300-75-3CT-311 W	8.661"	12.598"	202	60	3.54"	3CT 75 311	6811262
6275356	A-400-75-3CT-311 W	11.417"	15.748"	272	60	3.54"	3CT 75 311	6811266
6275371	A-500-75-3CT-311-W	14.566"	19.685"	2352	60	3.54"	3CT 75 311	6811270

Note: All wrenches are included with each boring head. No special tools are needed.
Metric heads are available on request.

90° ULTRAFINE FINISHING HEADS



Uses ISO standard inserts

UltraFINE finish heads feature an 11° relief angle that provides an ultra-smooth finish, reducing the need for extra operations.

FEATURES

- **AccuSET slide includes graduated dial for fast adjustments in 0.0001" increments**
- **Manufactured from top quality steel alloy, hardened to 58-60 HRc to minimize wear**
- **Pin-and-taper coupling system ensures maximum rigidity**

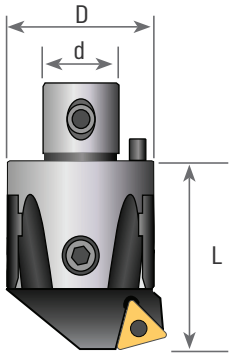

90° ULTRAFINE FINISHING HEADS INTEGRAL POCKET TYPE

Part No.	Description	Min	Max	D (mm)	d (mm)	L	Insert	Screw
6390253	A-22-90-310 W	.945"	1.181"	22	12	1.39"	TP_1.8(1.5)	6811250
6390258	A-27-90-310 W	1.142"	1.575"	27	15	1.65"	TP_01.8(1.5)	6811260
6390266	A-32-90-310 W	1.535"	1.969"	32	18	1.77"	TP_1.8(1.5)	6811260
6390276	A-42-90-311 W	1.929"	2.559"	42	24	2.20"	TP_221	6811262
6390291	A-54-90-311 W	2.48"	3.228"	54	28	2.59"	TP_221	6811262

90° ULTRAFINE FINISHING HEADS CARTRIDGE TYPE

Part No.	Description	Min	Max	D (mm)	d (mm)	L	Cartridge	Screw
6390306	A-68-90-2CT-311 W	3.15"	4.016"	68	36	3.39"	2CT 90 311	6811262
6390321	A-85-90-3CT-311 W	3.94"	4.921"	85	50	3.94"	3CT 90 311	6811266
6390336	A-100-90-3CT-311 W	4.92"	6.299"	110	60	3.94"	3CT 90 311	6811270
6390351	A-200-90-3CT-311 W	6.29"	8.66"	145	60	3.94"	3CT 90 311	6811262

90° ULTRAFINE LARGE FINISHING HEADS

Part No.	Description	Min	Max	D (mm)	d (mm)	L	Cartridge	Screw
6390366	A-300-90-3CT-311 W	8.661"	12.598"	202	60	3.54"	3CT 90 311	6811262
6390381	A-400-90-3CT-311 W	11.417"	15.748"	272	60	3.54"	3CT 90 311	6811266
6390396	A-500-90-3CT-311 W	14.566"	19.685"	2352	60	3.54"	3CT 90 311	6811270

Note: All wrenches are included with each boring head. No special tools are needed.
Metric heads are available on request.



FEATURES

- **Change lead angle or insert style by simply changing cartridges**
- **Precision ground accuracy**
- **Symmetrical or staggered boring**


75˚ type 300


75˚ type 402



75˚ LEAD ANGLE CARTRIDGES FOR SYMMETRICAL BORING

Part No.	Description	Insert	1	2	3	4	5	6	7
6675125	2CT-75-300	TCMT 32.5_	D-68-29	A-68-26	D-68-28	H5	H2	6811260	9355555
6675130	2CT-75-402	CCMT 43_	D-68-29	A-68-26	D-68-28	H5	H2	6811266	9355666
6675135	2CT-75-402N	CNMG 43_	D-68-29	A-68-26	D-68-28	H5	H2	6811270	9322116
6675140	3CT-75-300	TCMT 32.5_	D-85-29	D-85-27	D-68-28	H5	H3	6811262	9355555
6675145	3CT-75-402	CCMT 43_	D-85-29	D-85-27	D-68-28	H5	H3	6811266	9355666
6675150	3CT-75-402N	CNMG 43_	D-85-29	D-85-27	D-68-28	H5	H3	6811270	9322116

75° ULTRAFINE LEAD ANGLE CARTRIDGES FOR SYMMETRICAL BORING

Part No.	Description	Insert	1	2	3	4	5	6	7
6675126	2CT-75-311	TCMT 09T3_	D-68-29	A-68-26	D-68-28	H5	H2	6811260	T10
6675141	3CT-75-311	CCMT 1204_	D-85-29	A-68-27	D-68-28	H5	H3	6811266	T10

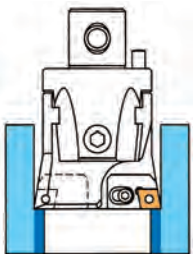
symmetrical boring

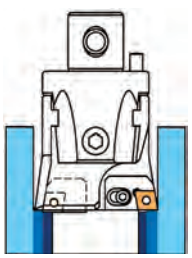
staggered boring

Staggered boring is possible by substituting a staggered cartridge in place of the regular cartridge.

This .020" of axial stagger will accommodate most staggered, or "stepped" boring processes.



FEATURES

- Change lead angle or insert style by simply changing cartridges
- Precision ground accuracy
- Symmetrical or staggered boring


90 ° type 300


90 ° type 402

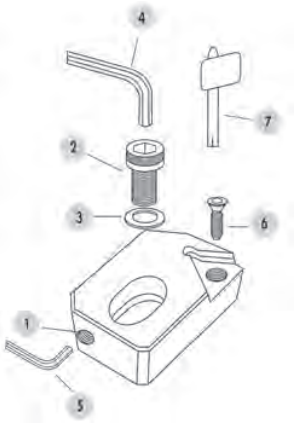

90 ° LEAD ANGLE CARTRIDGES FOR SYMMETRICAL BORING

Part No.	Description	Insert	1	2	3	4	5	6	7
6690125	2CT-90-300	TCMT 32.5_	D-68-29	A-68-26	D-68-28	H5	H2	6811260	9355555
6690130	2CT-90-402	CCMT 43_	D-68-29	A-68-26	D-68-28	H5	H2	6811266	9355666
6690135	2CT-90-402N	CNMG 43_	D-68-29	A-68-26	D-68-28	H5	H2	6811270	9322116
6690140	3CT-90-300	TCMT 32.5_	D-85-29	D-85-27	D-68-28	H5	H3	6811262	9355555
6690145	3CT-90-402	CCMT 43_	D-85-29	D-85-27	D-68-28	H5	H3	6811266	9355666
6690150	3CT-90-402N	CNMG 43_	D-85-29	D-85-27	D-68-28	H5	H3	6811270	9322116

90° ULTRAFINE LEAD ANGLE CARTRIDGES FOR SYMMETRICAL BORING

Part No.	Description	Insert	1	2	3	4	5	6	7
6690126	2CT-90-311	TCMT 09T3_	D-68-29	A-68-26	D-68-28	H5	H2	6811260	T10
6690141	3CT-90-311	CCMT 1204_	D-85-29	A-68-27	D-68-28	H5	H3	6811266	T10

90 ° LEAD ANGLE CARTRIDGES FOR STAGGERED BORING

Part No.	Description	Insert	1	2	3	4	5	6	7
6690155	2CT-90-300S	TCMT 32.5_	D-68-29	A-68-26	D-68-28	H5	H2	6811260	9355555
6690160	2CT-90-402S	CCMT 43_	D-68-29	A-68-26	D-68-28	H5	H2	6811266	9355666
6690165	2CT-90-402NS	CNMG 43_	D-68-29	A-68-26	D-68-28	H5	H2	6811270	9322116
6690170	3CT-90-300S	TCMT 32.5_	D-85-29	D-85-27	D-68-28	H5	H3	6811262	9355555
6690175	3CT-90-402S	CCMT 43_	D-85-29	D-85-27	D-68-28	H5	H3	6811266	9355666
6690180	3CT-90-402NS	CNMG 43_	D-85-29	D-85-27	D-68-28	H5	H3	6811270	9322116

BORING INSERTS

pg. 204 pg. 206 pg. 216 pg. 229



FEATURES

- ISO standard inserts
- TCMT, CCMT, CNMG, EPMT, and DCMT
- Use Magia LT-1000 grade inserts for extended insert life in all types of materials

TECH TIPS

ROUGHING:

Use the largest available corner radius unless otherwise specified.

FINISH BORING:

Use the smallest available corner radius to minimize tool deflection.

BEST FINISH:

Generally start with your feed at 25% of insert nose radius. Optimal speeds and feeds depend upon material, tool overhang, and setup conditions.

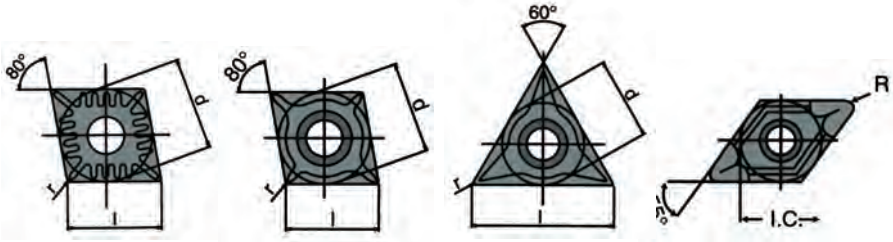

CNMG insert CCMT insert TCMT insert DCMT insert

We recommend LT1000 grade inserts for maximum insert performance. LT1000 grade features an advanced PVD coating that is 14 microns thick and lasts 250% longer than other inserts.

Inserts marked in green are for aluminum & alloys. For extended insert life we recommend LT 1000 grade.

Part No.	Description (ANSI)	Description (ISO)	Grade	l	s	r	Operation
3663336	CCGX 2(1.5)1 LH HP	CCGX 060204 LH	101	0.252	0.094	0.016	General
3663337	CCGX 3(2.5)1 LH HP	CCGX 09T304 LH	101	0.382	0.156	0.016	General
3663338	CCGX 3(2.5)2 LH HP	CCGX 09T308 LH	101	0.382	0.156	0.031	General
3663339	CCGX 432 LH HP	CCGX 120408 LH	101	0.508	0.187	0.031	General
3663311	CCMT 2(1.5)0 HF	CCMT 060202 HF	251	0.252	0.094	0.008	General
3664411	CCMT 2(1.5)1 NN	CCMT 060204 NN	LT 10	0.254	0.094	0.016	General
3668011	CCMT 2(1.5)1 NN	CCMT 060204 NN	LT 1000	0.254	0.094	0.016	General
3663399	CCMT 2(1.5)2 HM	CCMT 060208 HM	251	0.252	0.094	0.031	General
3663344	CCMT 3(2.5)0 HF	CCMT 09T302 HF	251	0.382	0.156	0.008	Finishing
3664413	CCMT 3(2.5)1 NN	CCMT 09T304 NN	LT 10	0.381	0.156	0.016	General
3668021	CCMT 3(2.5)1 NN	CCMT 09T304 NN	LT 1000	0.381	0.156	0.016	General
3664416	CCMT 3(2.5)2 NN	CCMT 09T308 NN	LT 10	0.381	0.156	0.036	General
3668026	CCMT 3(2.5)2 NN	CCMT 09T308 NN	LT 1000	0.381	0.156	0.036	General
3664422	CCMT 431 NN	CCMT 120404 NN	LT 1000	0.508	0.187	0.016	General
3664421	CCMT 431 NN	CCMT 120404 NN	LT 10	0.508	0.187	0.016	General
3664427	CCMT 432 NN	CCMT 120408 NN	LT 1000	0.508	0.187	0.036	General
3664425	CCMT 432 NN	CCMT 120408 NN	LT 10	0.508	0.187	0.036	General
3664429	CCMT 433 NN	CCMT 120412 NN	LT 1000	0.508	0.187	0.047	General
3631083	CCMT 433 NN	CCMT 120412 NN	LT 10	0.508	0.187	0.047	General
6607901	CNGG 431 ALU	CNGG 120404 ALU	LT 05	0.508	0.187	0.016	General
6607905	CNGG 432 ALU	CNGG 120408 ALU	LT 05	0.508	0.187	0.031	General

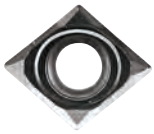

CC_ _



CCMT

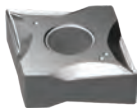

CN_ _

Inserts marked in green are for aluminum & alloys.

For extended insert life we recommend LT 1000 grade.

Part No.	Description (ANSI)	Description (ISO)	Grade	l	s	r	Operation
6607029	CNMG 431 NN	CNMG 120404 NN	LT 10	0.508	0.187	0.016	General
6608011	CNMG 431 NN	CNMG 120404 NN	LT 1000	0.508	0.187	0.016	General
6601436	CNMG 432 NM	CNMG 120408 NM	LT 10	0.508	0.187	0.031	Roughing
6601437	CNMG 432 NM	CNMG 120408 NM	LT 1000	0.508	0.187	0.031	Roughing
6607033	CNMG 432 NN	CNM G120408 NN	LT 10	0.508	0.187	0.031	General
6608016	CNMG 432 NN	CNMG 120408 NN	LT 1000	0.508	0.187	0.031	General
6601446	CNMG 432 NR	CNMG 120408 NR	LT 10	0.508	0.187	0.031	Roughing
6608026	CNMG 432 NX	CNMG 120408 NX	LT 1000	0.508	0.187	0.031	General
6607037	CNMG 433 NN	CNMG 120412 NN	LT 10	0.508	0.187	0.047	Roughing
6608021	CNMG 433 NN	CNMG 120412 NN	LT 1000	0.508	0.187	0.047	Roughing
3764421	DCMT 2(1.5)1 NN	DCMT 070304 NN	LT 10	0.305	0.094	0.016	Finishing
3768811	DCMT 2(1.5)1 NN	DCMT 070304 NN	LT 1000	0.305	0.094	0.016	Finishing
3764424	DCMT 3(2.5)1 NN	DCMT 11T304 NN	LT 10	0.458	0.156	0.016	General
3768821	DCMT 3(2.5)1 NN	DCMT 11T304 NN	LT 1000	0.458	0.156	0.016	General
3764427	DCMT 3(2.5)2 NN	DCMT 11T308 NN	LT 10	0.458	0.156	0.031	General
3768826	DCMT 3(2.5)2 NN	DCMT 11T308 NN	LT 1000	0.458	0.156	0.031	General
3732040	DCMT 432 PM4	DCMT 150408 PM4	5615	0.591	0.187	0.031	General
3563336	TCGX21.51 LH HP	TCGX110204 LH HP	101	0.433	0.94	0.016	Finishing
3563337	TCGX32.52 LH HP	TCGX16T308 LH HP	101	0.65	0.156	0.031	General
3533010	TCMT 1.2(1).50 PF4	TCMT 06T102 PF4	5615	0.378	0.094	0.004	Finishing
3533020	TCMT 1.2(1)1 PF4	TCMT 06T104 PF4	5625	0.378	0.094	0.008	Finishing
3563311	TCMT 1.8(1.5)0 HF	TCMT 090202 HF	251	0.378	0.094	0.008	Finishing
3563399	TCMT 1.8(1.5)2 HF	TCMT 090208 HF	251	0.378	0.094	0.016	General
3533033	TCMT 1.8(1.5)1 HM	TCMT 090204 HM	251	0.378	0.094	0.016	General
3533030	TCMT 1.8(1.5)1 PF4	TCMT 090204 PF4	5625	0.378	0.094	0.016	Finishing
3563388	TCMT 1.8(1.5)2 HM	TCMT090208 HM	251	0.378	0.094	0.031	General
3564431	TCMT 2(1.5)1 NN	TCMT 110204 NN	LT 10	0.433	0.094	0.016	Finishing
3568831	TCMT 2(1.5)1 NN	TCMT 110204 NN	LT 1000	0.433	0.094	0.016	Finishing
3564435	TCMT 2(1.5)2 NN	TCMT 110208 NN	LT 10	0.433	0.094	0.031	General
3568841	TCMT 2(1.5)2 NN	TCMT 110208 NN	LT 1000	0.433	0.094	0.031	General
3564438	TCMT 3(2.5)1 NN	TCMT 16T304 NN	LT 10	0.65	0.156	0.016	General
3568851	TCMT 3(2.5)1 NN	TCMT 16T304 NN	LT 1000	0.65	0.156	0.016	General
3564441	TCMT 3(2.5)2 NN	TCMT 16T308 NN	LT 10	0.65	0.156	0.031	General
3568861	TCMT 3(2.5)2 NN	TCMT 16T308 NN	LT 1000	0.65	0.156	0.031	General
3533032	TPGT 1.8(1.5)1-SF	TPGT090204-SF	YNG151C	0.378	0.090	0.016	Finishing
3533033	TPGH 1.8(1.5)0L	TPGH090202	YBG102	0.378	0.090	0.008	Finishing
3533034	TPGH 1.8(1.5)1L	TPGH090204	YBG102	0.378	0.090	0.016	Finishing
3933040	TPGH221L	TPGH110304	YBG102	0.433	0.130	0.016	Finishing



CNMG



DCMT

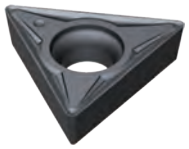

TC_ _

CAT40 TOOLHOLDERS

pg. 204 pg. 206 pg. 216 pg. 229



Reducers allow different size boring heads to be used with the same toolholder
Match the d dimension on toolholder and boring head for proper selection.

FEATURES

- Exceeds industry standards for taper accuracy and concentricity
- Two offset axial tapered locking screws maximize rigidity and allow fast tool changes
- Use extensions to increase boring depth

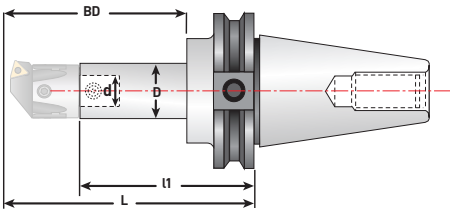

Boring depth (BD) is tool length plus boring head.

CAT40 BORING TOOLHOLDERS

Part No.	Description	D (mm)	d (mm)	BD	L	l1	Coupling Screw
6133250	CT-340-22-80	22	12	3.150"	4.65"	3.31"	6811510
6133255	CT-340-22-100	22	12	3.937"	5.43"	4.09"	6811510
6133260	CT-340-27-55	27	15	2.165"	3.54"	1.89"	6811520
6133265	CT-340-27-100	27	15	3.937"	5.43"	3.78"	6811520
6133270	CT-340-27-130	27	15	5.118"	6.61"	4.96"	6811520
6133275	CT-340-32-60	32	18	2.362"	3.78"	2.01"	6811530
6133280	CT-340-32-100	32	18	3.937"	5.43"	3.66"	6811530
6133285	CT-340-32-130	32	18	5.118"	6.61"	4.84"	6811530
6133290	CT-340-42-75	42	24	2.953"	4.41"	2.20"	6811540
6133295	CT-340-42-120	42	24	4.724"	5.59"	3.86"	6811540
6134300	CT-340-42-160	42	24	6.300"	7.17"	4.96"	6811540
6134305	CT-340-42-200	42	24	7.874"	8.74"	6.54"	6811540
6134310	CT-340-54-120	54	28	4.724"	5.59"	2.99"	6811550
6134315	CT-340-54-160	54	28	6.300"	7.17"	4.57"	6811550
6134320	CT-340-54-200	54	28	7.874"	8.74"	6.14"	6811550
6134325	CT-340-68-160	68	36	6.300"	7.20"	3.82"	6811560
6134330	CT-340-68-200	68	36	7.874"	8.78"	5.39"	6811560
6134335	CT-340-85-200	85	50	7.874"	8.819"	4.88"	6811570
6134338	CT-340-100-200	100	60	7.874"	8.819"	4.88"	6811580

CAT40 TOOLHOLDERS - COOLANT-THRU



Reducers allow different size boring heads to be used with the same toolholder
Match the d dimension on toolholder and boring head for proper selection.

FEATURES

- **Exceeds industry standards for taper accuracy and concentricity**
- **Two offset axial tapered locking screws maximize rigidity and allow fast tool changes**
- **Use extensions to increase boring depth**

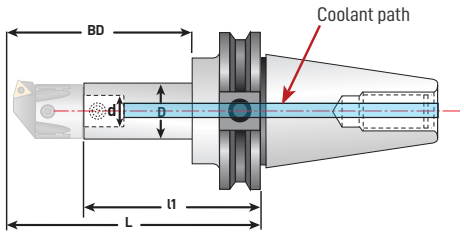

Boring depth (BD) is tool length plus boring head.

CAT40 COOLANT-THRU

Part No.	Description	D (mm)	d (mm)	BD	L	l1	Coupling Screw
6133257	CT-340-22-100-R	22	12	3.937"	5.43"	4.09"	6811510
6133252	CT-340-22-80-R	22	12	3.150"	4.65"	3.31"	6811510
6133267	CT-340-27-100-R	27	15	3.937"	5.43"	3.78"	6811520
6133272	CT-340-27-130-R	27	15	5.118"	6.61"	4.96"	6811520
6133262	CT-340-27-55-R	27	15	2.165"	3.54"	1.89"	6811520
6133282	CT-340-32-100-R	32	18	3.937"	5.34"	3.66"	6811530
6133287	CT-340-32-130-R	32	18	5.118"	6.61"	4.84"	6811520
6133277	CT-340-32-60-R	32	18	2.362"	3.78"	2.01"	6811530
6133297	CT-340-42-120-R	42	24	4.724"	5.59"	3.39"	6811540
6134302	CT-340-42-160-R	42	24	6.300"	7.17"	4.96"	6811540
6134307	CT-340-42-200-R	42	24	7.874"	8.74"	6.54"	6811540
6133292	CT-340-42-75-R	42	24	2.953"	4.41"	2.20"	6811540
6134312	CT-340-54-120-R	54	28	4.724"	5.59"	2.99"	6811550
6134317	CT-340-54-160-R	54	28	6.300"	7.17"	4.57"	6811550
6134322	CT-340-54-200-R	54	28	7.874"	8.74"	6.14"	6811550
6134327	CT-340-68-160-R	68	36	6.300"	7.20"	3.82"	6811560
6134332	CT-340-68-200-R	68	36	7.874"	8.78"	5.39"	6811560
6134337	CT-340-85-200-R	85	50	7.874"	8.819"	4.88"	6811570
6134340	CT-340-100-200-R	100	60	7.874"	8.819"	4.88"	6811580

CAT50 TOOLHOLDERS

pg. 204 pg. 206 pg. 216 pg. 229



Reducers allow different size boring heads to be used with the same toolholder

Match the d dimension on toolholder and boring head for proper selection.

FEATURES

- **Exceeds industry standards for taper accuracy and concentricity**
- **Two offset axial tapered locking screws maximize rigidity and allow fast tool changes**
- **Use extensions to increase boring depth**

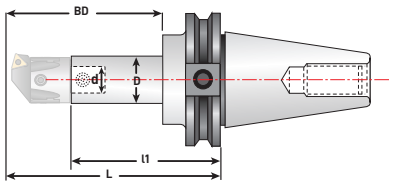

Boring depth (BD) is tool length plus boring head.

CAT50 BORING TOOLHOLDERS

Part No.	Description	D (mm)	d (mm)	BD	L	l1	Coupling Screw
6141250	CT-350-22-80	22	12	3.150"	4.65"	3.31"	6811510
6141255	CT-350-22-100	22	12	3.937"	5.43"	4.09"	6811510
6141260	CT-350-27-55	27	15	2.165"	3.54"	1.89"	6811520
6141265	CT-350-27-100	27	15	3.937"	5.43"	3.78"	6811520
6141270	CT-350-27-130	27	15	5.118"	6.61"	4.96"	6811520
6141275	CT-350-32-60	32	18	2.362"	3.78"	2.01"	6811530
6141280	CT-350-32-130	32	18	5.118"	6.61"	4.84"	6811530
6141285	CT-350-32-160	32	18	6.299"	7.80"	6.02"	6811530
6141290	CT-350-42-75	42	24	2.953"	4.41"	2.20"	6811540
6141295	CT-350-42-160	42	24	6.299"	7.80"	5.59"	6811540
6141300	CT-350-42-200	42	24	7.874"	9.37"	7.17"	6811540
6141305	CT-350-54-90	54	28	3.543"	5.04"	2.44"	6811550
6141310	CT-350-54-160	54	28	6.299"	7.80"	5.20"	6811550
6141315	CT-350-54-200	54	28	7.874"	9.37"	6.77"	6811550
6141320	CT-350-68-115	68	36	4.528"	5.94"	2.56"	6811560
6141325	CT-350-68-200	68	36	7.874"	8.78"	5.39"	6811560
6141330	CT-350-68-260	68	36	10.236"	11.14"	7.76"	6811560
6141335	CT-350-85-200	85	50	7.874"	8.82"	4.88"	6811570
6141340	CT-350-85-260	85	50	10.236"	11.18"	7.24"	6811570
6141345	CT-350-85-320	85	50	12.598"	13.54"	9.61"	6811570
6141350	CT-350-100-190	100	60	7.480"	8.43"	4.49"	6811580
6141355	CT-350-100-260	100	60	10.236"	11.18"	7.24"	6811580
6141360	CT-350-100-320	100	60	12.598"	13.54"	9.61"	6811580
6166124	CT-550-160*	100	60	4.921"	6.30"	2.76"	6811590

CAT50 TOOLHOLDERS - COOLANT-THRU



Reducers allow different size boring heads to be used with the same toolholder
Match the d dimension on toolholder and boring head for proper selection.

FEATURES

- Exceed industry standards for taper accuracy and concentricity
- Two offset axial tapered locking screws maximize rigidity and allow fast tool changes
- Use extensions to increase boring depth

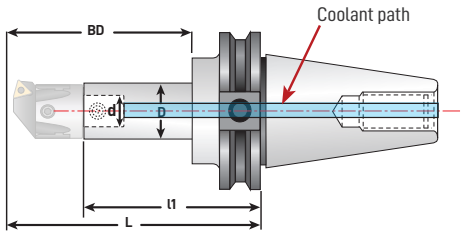

Boring depth (BD) is tool length plus boring head.

CAT50 COOLANT-THRU

Part No.	Description	D (mm)	d (mm)	BD	L	l1	Coupling Screw
6141252	CT-350-22-80-R	22	12	3.150"	4.65"	3.31"	6811510
6141257	CT-350-22-100-R	22	12	3.937"	5.43"	4.09"	6811510
6141262	CT-350-27-55-R	27	15	2.165"	3.54"	1.89"	6811520
6141267	CT-350-27-100-R	27	15	3.937"	5.43"	3.78"	6811520
6141272	CT-350-27-130-R	27	15	5.118"	6.61"	4.96"	6811520
6141277	CT-350-32-60-R	32	18	2.362"	3.78"	2.01"	6811530
6141282	CT-350-32-130-R	32	18	5.118"	6.61"	4.84"	6811530
6141287	CT-350-32-160-R	32	18	6.299"	7.80"	6.02"	6811530
6141292	CT-350-42-75-R	42	24	2.953"	4.41"	2.20"	6811540
6141297	CT-350-42-160-R	42	24	6.299"	7.80"	5.59"	6811540
6141302	CT-350-42-200-R	42	24	7.874"	9.37"	7.17"	6811540
6141307	CT-350-54-90-R	54	28	3.543"	5.04"	2.44"	6811550
6141312	CT-350-54-160-R	54	28	6.299"	7.80"	5.20"	6811550
6141317	CT-350-54-200-R	54	28	7.874"	9.37"	6.77"	6811550
6141322	CT-350-68-115-R	68	36	4.528"	5.94"	2.56"	6811560
6141327	CT-350-68-200-R	68	36	7.874"	8.78"	5.39"	6811560
6141332	CT-350-68-260-R	68	36	10.236"	11.14"	7.76"	6811560
6141337	CT-350-85-200-R	85	50	7.874"	8.82"	4.88"	6811570
6141342	CT-350-85-260-R	85	50	10.236"	11.18"	7.24"	6811570
6141347	CT-350-85-320-R	85	50	12.598"	13.54"	9.61"	6811570
6141352	CT-350-100-190-R	100	60	7.480"	8.43"	4.49"	6811580
6141362	CT-350-100-320-R	100	60	12.598"	13.54"	9.61"	6811580
6141357	CT-350-100-260-R	100	60	10.236"	11.18"	7.24"	6811580

BT30 / BT40 TOOLHOLDERS

pg. 204 pg. 206 pg. 216 pg. 229



Reducers allow different size boring heads to be used with the same toolholder
Match the d dimension on toolholder and boring head for proper selection.

FEATURES

- Exceeds industry standards for taper accuracy and concentricity
- Two offset axial tapered locking screws maximize rigidity and allow fast tool changes
- Use extensions to increase boring depth

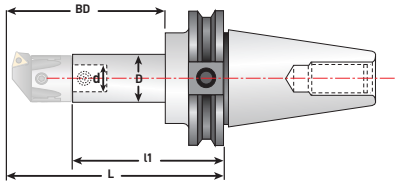

Boring depth (BD) is tool length plus boring head.

BT30 BORING TOOLHOLDERS

Part-No.	Description	D (mm)	d (mm)	BD	L	l1	Coupling-Screw
6130100	BT-330-22-100	22	12	3.937"	4.92"	3.58"	6811510
6130150	BT-330-27-55	27	15	2.165"	3.03"	1.38"	6811520
6130200	BT-330-27-100	27	15	3.937"	4.92"	3.27"	6811520
6130250	BT-330-32-60	32	18	2.362"	3.27"	1.50"	6811530
6130300	BT-330-32-100	32	18	3.937"	4.92"	3.15"	6811530

BT40 BORING TOOLHOLDERS

Part-No.	Description	D (mm)	d (mm)	BD	L	l1	Coupling-Screw
6140100	BT-340-22-50	22	12	1.969"	3.15"	1.81"	6811510
6140125	BT-340-22-80	22	12	3.150"	4.33"	2.99"	6811510
6140150	BT-340-22-100	22	12	3.937"	5.12"	3.78"	6811510
6140175	BT-340-27-55	27	15	2.165"	3.23"	1.57"	6811520
6140200	BT-340-27-100	27	15	3.937"	5.12"	3.46"	6811520
6140225	BT-340-27-130	27	15	5.118"	6.30"	4.65"	6811520
6140250	BT-340-32-60	32	18	2.362"	3.46"	1.69"	6811530
6140275	BT-340-32-100	32	18	3.937"	5.12"	3.35"	6811530
6140300	BT-340-32-130	32	18	5.118"	6.30"	4.53"	6811530
6140325	BT-340-42-75	42	24	2.953"	4.09"	1.89"	6811540
6140350	BT-340-42-160	42	24	6.299"	7.48"	5.28"	6811540
6140375	BT-340-42-200	42	24	7.874"	9.06"	6.85"	6811540
6140400	BT-340-54-90	54	28	3.543"	4.72"	2.13"	6811550
6140425	BT-340-54-160	54	28	6.299"	7.48"	4.88"	6811550
6140450	BT-340-54-200	54	28	7.874"	9.06"	6.46"	6811550
6140475	BT-340-68-160	68	36	6.299"	7.13"	3.74"	6811560
6140500	BT-340-68-200	68	36	7.874"	8.70"	5.31"	6811560
6140525	BT-340-85-200	85	50	7.874"	8.66"	4.72"	6811570
6140550	BT-340-100-200	100	60	7.874"	8.66"	4.72"	6811580



Reducers allow different size boring heads to be used with the same toolholder
Match the d dimension on toolholder and boring head for proper selection.

FEATURES

- Exceed industry standards for taper accuracy and concentricity
- Two offset axial tapered locking screws maximize rigidity and allow fast tool changes
- Use extensions to increase boring depth

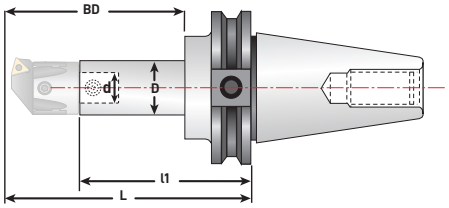

Boring depth (BD) is tool length plus boring head.

BT50 BORING TOOLHOLDERS

Part No.	Description	D (mm)	d (mm)	BD	L	l1	Coupling Screw
6150100	BT-350-22-80	22	12	3.150"	4.76"	3.43"	6811510
6150125	BT-350-22-100	22	12	3.937"	5.55"	4.21"	6811510
6150150	BT-350-27-55	27	15	2.165"	3.66"	2.01"	6811520
6150175	BT-350-27-100	27	15	3.937"	5.55"	3.90"	6811520
6150200	BT-350-27-130	27	15	5.118"	6.73"	5.08"	6811520
6150225	BT-350-32-60	32	18	2.362"	3.90"	2.13"	6811530
6150250	BT-350-32-130	32	18	5.118"	6.73"	4.96"	6811530
6150275	BT-350-32-160	32	18	6.299"	7.91"	6.14"	6811530
6150300	BT-350-42-75	42	24	2.953"	4.53"	2.32"	6811540
6150325	BT-350-42-160	42	24	6.299"	7.91"	5.71"	6811540
6150350	BT-350-42-200	42	24	7.874"	9.49"	7.28"	6811540
6150375	BT-350-54-90	54	28	3.543"	5.16"	2.56"	6811550
6150400	BT-350-54-160	54	28	6.299"	7.91"	5.31"	6811550
6150425	BT-350-54-200	54	28	7.874"	9.49"	6.89"	6811550
6150450	BT-350-68-115	68	36	4.528"	6.06"	2.68"	6811560
6150475	BT-350-68-200	68	36	7.874"	9.53"	6.14"	6811560
6150500	BT-350-68-260	68	36	10.236"	11.89"	8.50"	6811560
6150525	BT-350-85-200	85	50	7.874"	9.53"	5.59"	6811570
6150550	BT-350-85-260	85	50	10.236"	11.89"	7.95"	6811570
6150575	BT-350-85-320	85	50	12.598"	14.25"	10.31"	6811570
6150600	BT-350-100-170	100	60	6.693"	7.68"	3.74"	6811580
6150625	BT-350-100-260	100	60	10.236"	11.89"	7.95"	6811580
6150650	BT-350-100-320	100	60	12.598"	14.25"	10.31"	6811580
6166123	BT-550-160*	100	60	4.921"	6.30"	2.76"	6811590

*BT-550-160 is for direct mounting of large heads.

HSK TOOLHOLDERS

pg. 204 pg. 206 pg. 216 pg. 229



Reducers allow different size boring heads to be used with the same toolholder

Match the d dimension on toolholder and boring head for proper selection.

FEATURES

- Two offset axial tapered locking screws maximize rigidity and allow fast tool changes
- Use extensions to increase boring depth

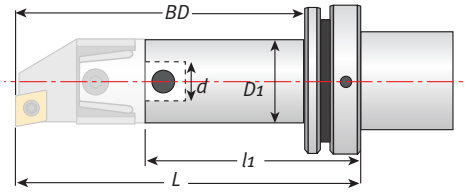

Boring depth (BD) is tool length plus boring head.

HSK50A BORING TOOLHOLDERS

Part No.	Description	D1 (mm)	d (mm)	BD	L	l1	Coupling Screw
6155501	HSK-50A-22-55	22	12	2.165"	3.19"	1.85"	6811510
6155502	HSK-50A-27-65	27	15	2.559"	3.58"	1.93"	6811520
6155503	HSK-50A-32-75	32	18	2.953"	3.98"	2.20"	6811530
6155504	HSK-50A-42-90	42	24	3.543"	4.57"	2.36"	6811540

HSK63A BORING TOOLHOLDERS

Part No.	Description	D1 (mm)	d (mm)	BD	L	l1	Coupling Screw
6155631	HSK-63A-22-55	22	12	2.165"	3.19"	1.85"	6811510
6155632	HSK-63A-27-65	27	15	2.559"	3.58"	1.93"	6811520
6155633	HSK-63A-32-75	32	18	2.953"	3.98"	2.20"	6811530
6155634	HSK-63A-42-90	42	24	3.543"	4.57"	2.36"	6811540
6155635	HSK-63A-54-110	54	28	4.331"	5.35"	2.76"	6811550
6155636	HSK-63A-68-145	68	36	5.709"	6.73"	3.35"	6811560

HSK100A BORING TOOLHOLDERS

Part No.	Description	D1 (mm)	d (mm)	BD	L	l1	Coupling Screw
6155101	HSK-100A-22-55	22	12	2.165"	3.50"	2.165"	6811510
6155102	HSK-100A-27-65	27	15	2.559"	3.90"	2.244"	6811520
6155103	HSK-100A-32-75	32	18	2.953"	4.09"	2.322"	6811530
6155104	HSK-100A-42-90	42	24	3.543"	4.69"	2.480"	6811540
6155105	HSK-100A-54-110	54	28	4.331"	5.47"	2.847"	6811550
6155106	HSK-100A-68-145	68	36	5.709"	6.85"	3.46"	6811560
6155107	HSK-100A-85-165	85	50	6.496"	7.64"	3.70"	6811570
6155108	HSK-100A-100-185	100	60	7.283"	8.43"	4.49"	6811580
6166125	HSK-550-160*	100	60	5.511"	6.692"	3.149"	6811590

*HSK-550-160 is for direct mounting of large heads.



Match the d dimension on toolholder and boring head for proper selection.

FEATURES

- **Use with any Techniks End Mill Holders with H5 bore tolerance for boring applications from .315" up to 3.228"**
- **Two offset axial tapered locking screws maximize rigidity and allow fast tool changes**

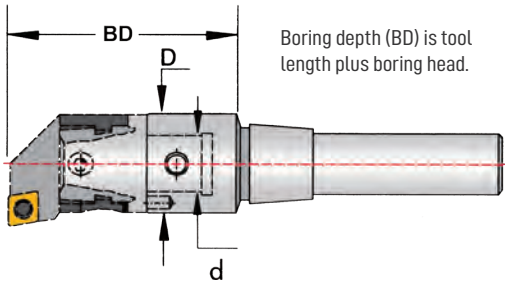

Boring depth (BD) is tool length plus boring head.

WELDON 3/4" SHANK

Part No.	Description	D (mm)	d (mm)	BD	Coupling Screws
6165341	B-20-22-50-3/4-SS-WELDON	22	12	1.969"	6811510
6165342	B-20-22-100-3/4-SS-WELDON	22	12	3.937"	6811510
6165343	B-20-54-110-3/4-SS-WELDON	54	28	4.331"	6811550

WELDON 1" SHANK

Part No.	Description	D (mm)	d (mm)	BD	Coupling Screws
6165101	B-25-27-55-1.0-SS-WELDON	27	15	2.165"	6811520
6165102	B-25-27-100-1.0-SS-WELDON	27	15	3.937"	6811520
6165103	B-25-54-110-1.0-SS-WELDON	54	28	4.331"	6811550

WELDON 1-1/4" SHANK

Part No.	Description	D (mm)	d (mm)	BD	Coupling Screws
6165141	B-32-32-60-1-1/4-SS-WELDON	32	18	2.362"	6811530
6165142	B-32-32-100-1-1/4-SS-WELDON	32	18	3.937"	6811530
6165143	B-32-42-90-1-1/4-SS-WELDON	42	24	3.543"	6811540
6165144	B-32-54-110-1-1/4-SS-WELDON	54	28	4.331"	6811550

WELDON 1-1/2" SHANK

Part No.	Description	D (mm)	d (mm)	BD	Coupling Screws
6165121	B-40-42-90-1-1/2-SS-WELDON	42	24	3.543"	6811540
6165122	B-40-42-160-1-1/2-SS-WELDON	42	24	6.299"	6811540
6165123	B-40-54-110-1-1/2-SS-WELDON	54	28	4.331"	6811550

R8 TOOLHOLDERS

Part No.	Description	D (mm)	d (mm)	BD	Coupling Screws
6165801	R8-22-50-R8	22	12	1.969"	6811510
6165802	R8-27-60-R8	27	15	2.362"	6811520
6165803	R8-32-75-R8	32	18	2.953"	6811530
6165804	R8-42-90-R8	42	24	3.543"	6811540
6165805	R8-54-110-R8	54	28	4.331"	6811550



R8 Tool holder

LARGE HEAD HOLDERS

pg. 204 pg. 206 pg. 216 pg. 229



FEATURES

- Maximum rigidity and accuracy
- CAT, BT, HSK100A spindles
- Nickel-chrome alloy steel ensures best reliablity and repeatability

Boring depth (BD) is tool length plus boring head.

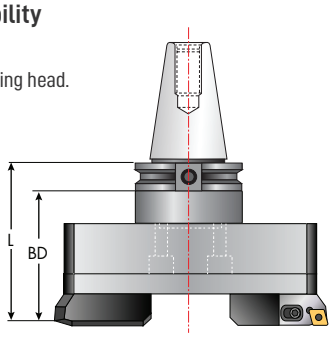

CAT, BT, HSK DIRECT MOUNT TOOLHOLDERS

Part No.	Description	D	L	lbs
6166124	CAT-550-160-W	3.93"	2.75"	12.45
6166123	BT-550-160	3.93"	2.75"	13.24
6166125	HSK-550-160	3.93"	3.14"	11.55



adapter mount holders require 6022510 adapter



optional extension



required adapter

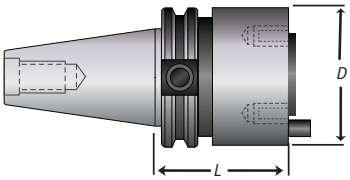

direct mount toolholder

CAT, BT, HSK100A ADAPTER MOUNT TOOLHOLDERS

Part No.	Description	D	L	lbs
6141350	CAT-350-100-190-W	3.93"	4.48"	14.50
6141355	CAT-350-100-260-W	3.93"	7.24"	24.25
6141360	CAT-350-100-320-W	3.93"	9.60"	32.32
6150600	BT-350-100-170	3.93"	3.74"	12.74
6150625	BT-350-100-260	3.93"	7.95"	27.47
6150650	BT-350-100-320	3.93"	10.31"	35.45
6155108	HSK-100A-100-185	3.93"	4.48"	12.50

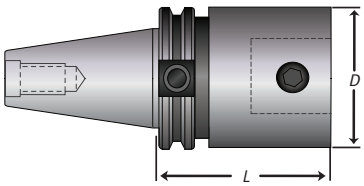

adapter mount toolholder

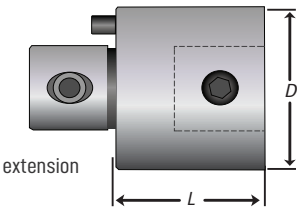

extension

OPTIONAL EXTENSIONS (REQUIRE ADAPTER FOR LARGE HEAD MOUNTING)

Part No.	Description	D	L	lbs
6551080	P-100-80	3.93"	3.14"	10.10
6551012	P-100-120	3.93"	4.72"	15.56

Extensions can be used with adaptor mount toolholders but do require a adaptor for large head mounting.

LARGE HEAD ADAPTER (USE WITH ADAPTER MOUNT HOLDERS)

Part No.	Description	D	L	lbs
6022510	ADT-100-50	3.93"	1.96"	9.61

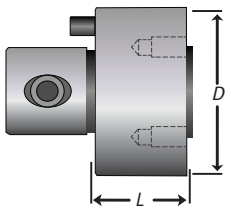

large head adapter

FINISHING HEADS

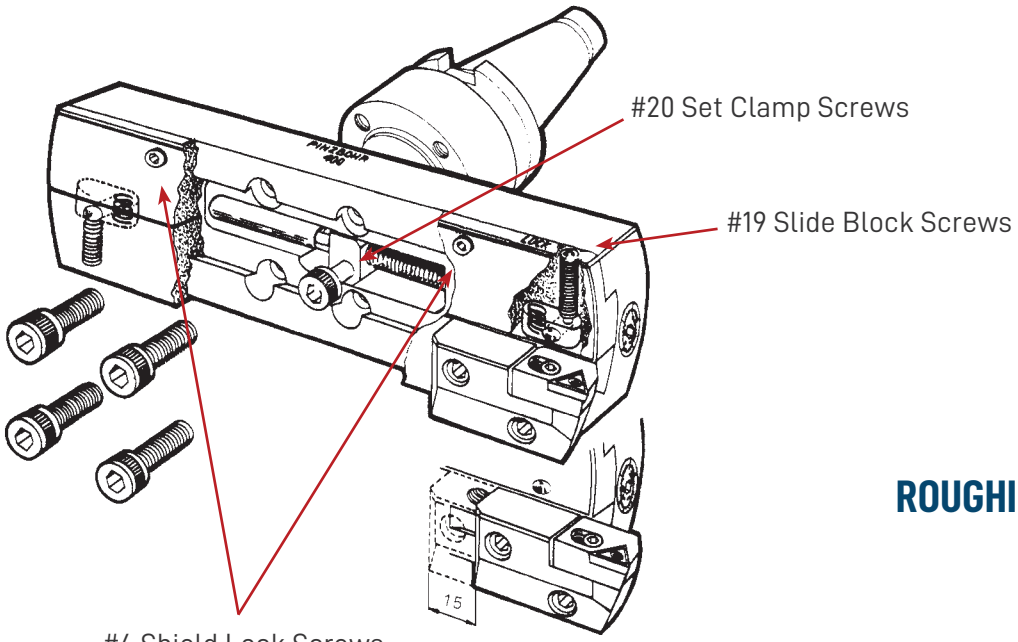

ROUGHING HEADS

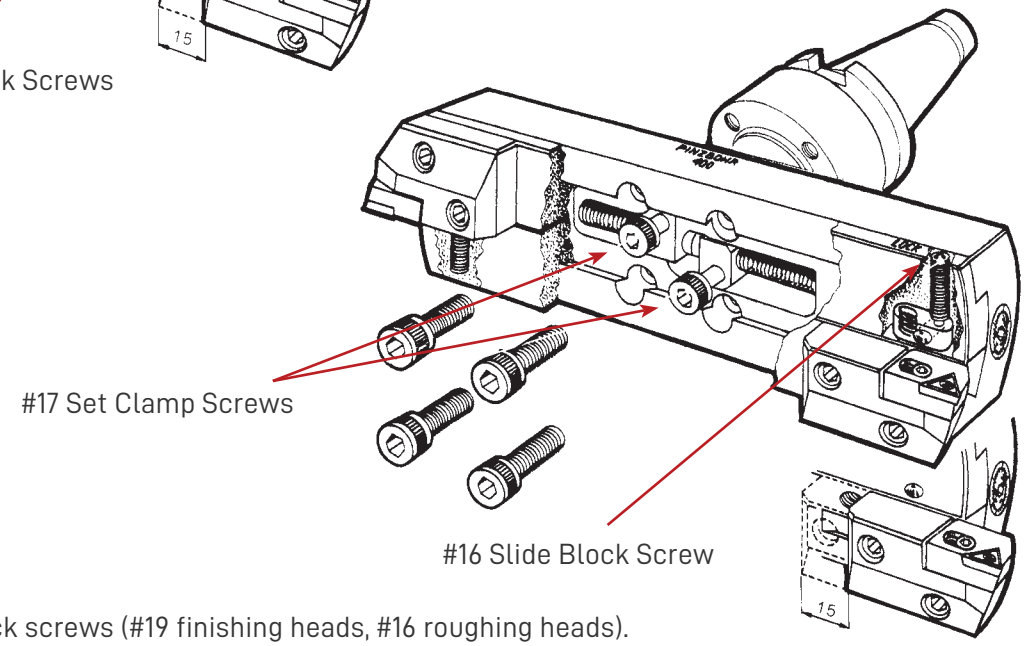

1. Loosen slide block screws (#19 finishing heads, #16 roughing heads).
2. Remove set clamp screws (#20 finishing heads, #17 roughing heads).
3. On finish boring heads only, remove shield lock screws #4.
4. Move slide blocks / shield off-center until the four counter bored bolt holes located in the body below the slide blocks are completely exposed.
5. Place taper shank holder or adapter on back side of boring head with pilot completely engaged in pilot cavity.
6. Insert 4 socket head cap screws into counter bored holes and tighten to 90 ft-lbs torque.
7. Push slide blocks back into position to line up with threaded holes below.
8. Insert nut / close shield lock screws and tighten.
9. Adjust boring head to desired diameter and tighten slide block lock screws.

EXTENSIONS

pg. 204 pg. 206 pg. 216 pg. 229



FEATURES

- **Extend boring depth**
- **Two offset axial tapered locking screws maximize rigidity and allow fast tool changes**

Calculate needed extension length (L) to achieve your boring depth (BD)

STANDARD EXTENSIONS

Part No.	Description	D (mm)	d (mm)	L	Coupling Screw
6552220	P-22-20	22	12	0.79"	6811510
6552230	P-22-30	22	12	1.18"	6811510
6552730	P-27-30	27	15	1.18"	6811520
6552745	P-27-45	27	15	1.77"	6811520
6553235	P-32-35	32	18	1.38"	6811530
6553252	P-32-52	32	18	2.05"	6811530
6554240	P-42-40	42	24	1.57"	6811540
6554260	P-42-60	42	24	2.36"	6811540
6555450	P-54-50	54	28	1.97"	6811550
6555475	P-54-75	54	28	2.95"	6811550
6556860	P-68-60	68	36	2.36"	6811560
6556890	P-68-90	68	36	3.54"	6811560
6558570	P-85-70	85	50	2.76"	6811570
6558510	P-85-105	85	50	4.13"	6811570
6551080	P-100-80	100	60	3.15"	6811580
6551012	P-100-120	100	60	4.72"	6811580

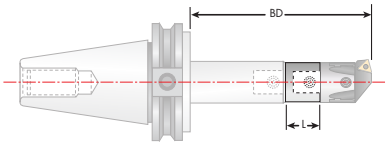

Match the "d" dimensions on toolholder, extension, and boring head for proper selection.

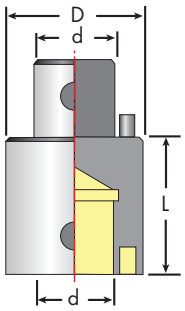

COOLANT-THRU SPINDLE EXTENSION

Part No.	Description	D (mm)	d (mm)	L	Coupling Screw
6562230	P-22-30R	22	12	1.18"	6811510
6562730	P-27-30R	27	15	1.18"	6811520
6563235	P-32-35R	32	18	1.38"	6811530
6564240	P-42-40R	42	24	1.57"	6811540
6565450	P-54-50R	54	28	1.97"	6811550
6566860	P-68-60R	68	36	2.36"	6811560
6568570	P-85-70R	85	50	2.76"	6811570
6561080	P-100-80R	100	60	3.15"	6811580

Use with coolant-thru toolholders available upon request.

COOLANT-THRU SPINDLE EXTENSION

The coolant-thru spindle extension provides coolant to the cutting zone for optimal stock removal rates.

Minimum recommend coolant pressure is 70 psi. Coolant is directed onto cutting edge by adapter.

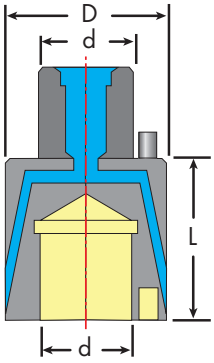

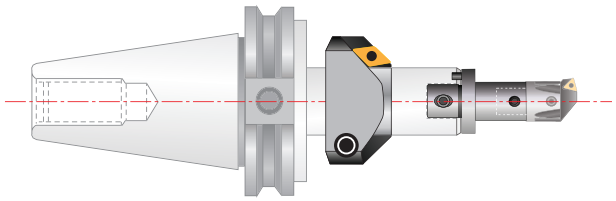

FEATURES

- **Reducers allow different boring heads to be used with the same toolholder / extension combination**
- **Two offset axial tapered locking screws maximize rigidity and allow fast tool changes**

Match the "d" dimensions on toolholder, reducer, and boring head for proper selection.

45˚ CHAMFERING HEADS

Part No.	Desc.	D (mm)	d (mm)	L	Insert	Insert Screw	Wrench	Hex Wrench
6033311	CH-22	43	22	0.94"	DCMT 32.5_	6811260	9355555	4 hex
6033322	CH-27	48	27	0.94"	DCMT 32.5_	6811260	9355555	4 hex
6033333	CH-32	62	32	1.18"	DCMT 32.5_	6811260	9355555	5 hex
6033344	CH-42	72	42	1.18"	DCMT 32.5_	6811260	9355555	5 hex
6033355	CH-54	94	54	1.57"	DCMT 43_	6811266	9355666	6 hex
6033366	CH-68	110	68	1.57"	DCMT 43_	6811266	9355666	8 hex
6033377	CH-85	145	85	2.17"	DCMT 43_	6811266	9355666	10 hex
6033388	CH-100	170	100	2.36"	DCMT 43_	6811266	9355666	14 hex
6033399	CH-200	200	100	2.36"	DCMT 43_	6811266	9355666	14 hex



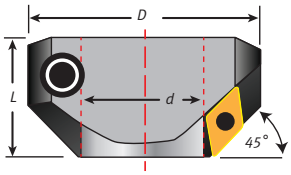

REDUCERS

Part No.	Description	D (mm)	d (mm)	D1 (mm)	d1 (mm)	L	c	Coupling Screw
6442236	R-27-22-36	27	15	22	12	1.02"	.39"	6811510
6442240	R-32-22-40	32	18	22	12	1.18"	.39"	6811510
6442258	R-42-22-58	42	24	22	12	1.89"	.39"	6811510
6442286	R-54-22-86	54	28	22	12	2.99"	.39"	6811510
6442210	R-68-22-102	68	36	22	12	3.54"	.47"	6811510
6442734	R-32-27-34	32	18	27	15	0.94"	.39"	6811520
6442750	R-42-27-50	42	24	27	15	1.57"	.39"	6811520
6442780	R-54-27-80	54	28	27	15	2.76"	.39"	6811520
6442795	R-68-27-95	68	36	27	15	3.27"	.47"	6811520
6443246	R-42-32-46	42	24	32	18	1.42"	.39"	6811530
6443276	R-54-32-76	54	28	32	18	2.60"	.39"	6811530
6443290	R-68-32-90	68	36	32	18	3.07"	.47"	6811530
6444270	R-54-42-70	54	28	42	24	2.36"	.39"	6811540
6444282	R-68-42-82	68	36	42	24	2.76"	.47"	6811540
6444295	R-85-42-95	85	50	42	24	3.27"	.47"	6811540
6445472	R-68-54-72	68	36	54	28	2.36"	.47"	6811550
6445490	R-85-54-90	85	50	54	28	3.07"	.47"	6811550
6446810	R-85-68-100	85	50	68	36	3.46"	.47"	6811560
6448510	R-100-85-100	100	60	85	50	3.46"	.47"	6811570



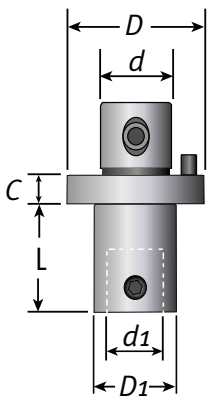

END MILL HOLDERS & FACE MILL ARBORS

pg. 204 pg. 206 pg. 216 pg. 229



FEATURES

- For 1/4" up to 3/4" end mills
- Use with extra-long toolholders and extensions for extended length applications
- Two offset center lock screws maximize rigidity while still permitting fast tool changes

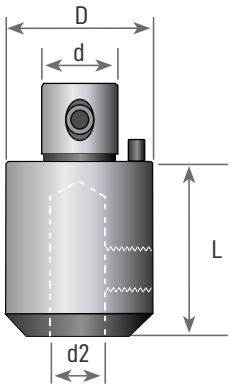

END MILL HOLDERS

Part No.	Description	D (mm)	d (mm)	L	d2
6123300	ADM-42-W1/4	42	24	1.38"	1/4"
6123305	ADM-42-W3/8	42	24	1.50"	3/8"
6123310	ADM-42-W1/2	42	24	2.17"	1/2"
6123315	ADM-42-W3/4	42	28	2.83"	3/4"
6123320	ADM-54-W3/4	54	28	2.85"	3/4"



FEATURES

- For 3/4" up to 1-1/4" face mills
- Two offset center lock screws maximize rigidity while still permitting fast tool changes
- Use with extra-long toolholders and extensions for extended length applications

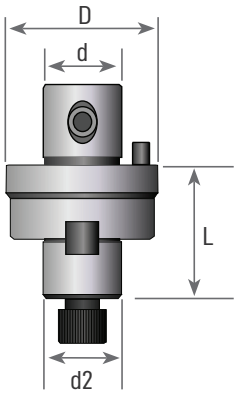

FACE MILL ARBORS

Part No.	Description	D (mm)	d (mm)	L	d2
6133300	ADM-54-3/4	54	28	1.97"	3/4"
6133305	ADM-54-1.0	54	28	1.97"	1.0"
6133310	ADM-68-1.0	68	36	1.97"	1.0"
6133315	ADM-68-1-1/4	68	36	1.97"	1-1/4"

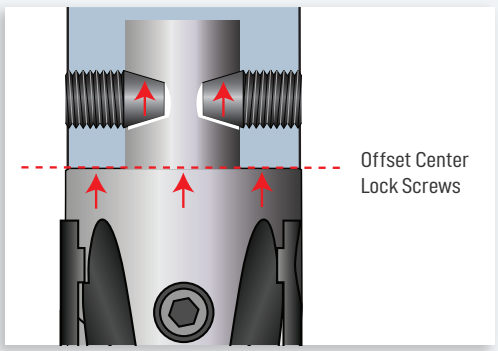

MODULAR COUPLING SYSTEMES

Our modular coupling system allows heads to be changed without removing tools from the spindle. Two offset center lock screws apply maximum tightening force between the boring head and the toolholder. This increases rigidity and enhances vibration dampening characteristics.

MACROBOHR MODULAR BORING SYSTEM

MODULAR BORING SYSTEMS FOR LARGE DIAMETER BORING



RANGE: 8.661" TO 40.157"

FOR FINISH, ROUGH, AND EXTERNAL BORING

EASY-TO-USE, NO COMPLICATED SETUPS

HARD COATED ALUMINUM AND NICKEL-CHROME ALLOY STEEL FOR MAXIMUM ACCURACY AND RIGIDTY

MACROBOHR LARGE HOLE BORING

pg. 204 pg. 206 pg. 216 pg. 229

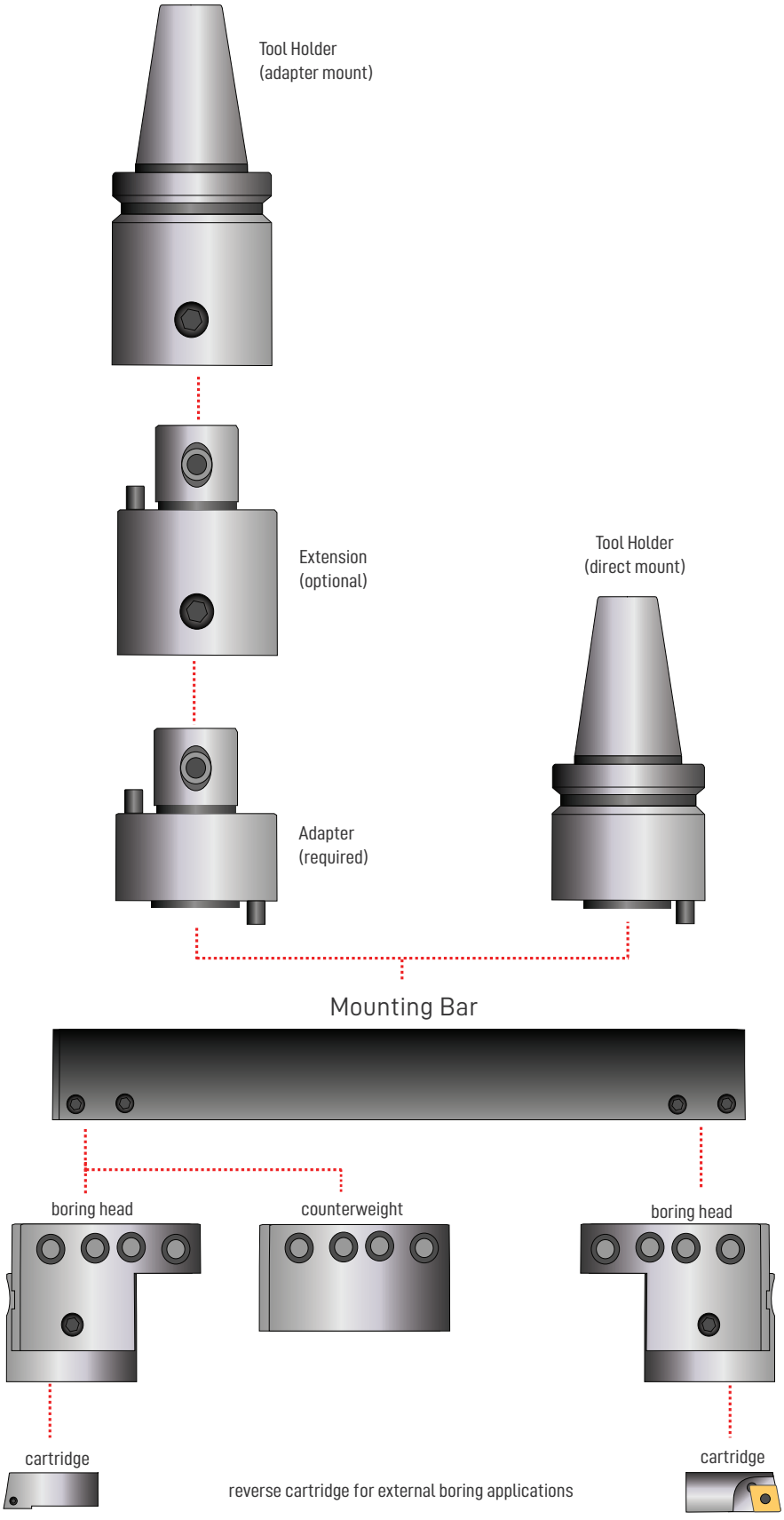

MACROBOHR MODULAR SYSTEM



The MacroBOHR boring system is a lightweight line of tools optimized for large diameter boring.

MacroBOHR tools are capabable of boring holes ranging from 8.661" up to 40.157".

All tool holders, boring heads, & counterweights are made from high-strength aluminum or nickle-chrome alloy steel. The boring heads are fully indexable on the plates and very easy to setup.

MACROBOHR BORING RANGE



Boring holes from 8.661" up to 40.157" can be achieved by simply changing the plate size. Each plate has 2 radial positions to locate the boring head and counter-weight to achieve minimum or maximum bore size.

Use MacroBOHR for finish, rough, and external boring applications. External boring is achieved by reversing the cartridge position.

MACROBOHR LARGE HOLE BORING



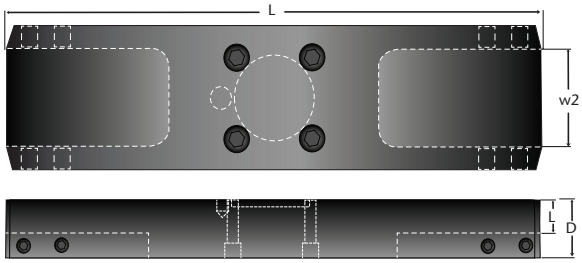

MOUNTING PLATES

Part No.	Description	Min	Max	L	w2	D	L	lbs	Coupling screw	Qty.	Fixing Screw	Qty.
6921255	MB-SP-0320	8.66"	12.59"	7.87"	3.93"	2.28"	1.22"	4.76	TF 100	4	TC-068-1624	8
6921256	MB-SP-0420	12.59"	16.53"	11.81"	3.93"	2.28"	1.22"	7.21	TF 100	4	TC-068-1624	8
6921257	MB-SP-0520	16.53"	20.47"	15.74"	3.93"	2.28"	1.22"	11.46	TF 101	4	TC-068-1624	8
6921258	MB-SP-0620	20.47"	24.40"	19.68"	3.93"	2.67"	1.61"	18.08	TF 102	4	TC-068-1624	8
6921259	MB-SP-0720	24.40"	28.34"	23.62"	3.93"	2.67"	1.61"	22.27	TF 102	4	TC-068-1624	8
6921260	MB-SP-0820	28.34"	32.28"	27.55"	3.93"	2.67"	1.61"	26.24	TF 102	4	TC-068-1624	8
6921261	MB-SP-0920	32.28"	36.22"	31.49"	3.93"	3.07"	2.00"	35.27	TF 103	4	TC-068-1624	8
6921262	MB-SP-1020	36.22"	40.15"	35.43"	3.93"	3.07"	2.00"	39.90	TF 103	4	TC-068-1624	8





AccuSET graduated dial in 0.0001" increments for fast and easy cutting adjustments.

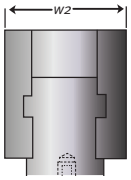

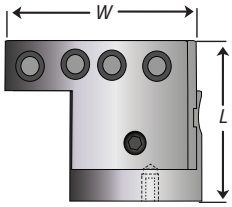

BORING HEAD

Part No.	Description	W	L	w2	lbs	Cartridge Screw	Adjusting Key	Locking Key
6390410	MB-068-W	4.07"	3.42"	2.67"	6.77	CS 10 25	HK 050	HK 080



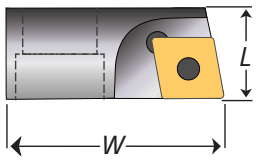

CARTRIDGES

Part No.	Description	Insert	W	L	lbs	Torx Screw	Torx Key
6690190	TP_22_	TP-1102	2.00"	.78"	0.22	TT 400	TK 08
6922243	TC_32.5_	TC-16T3	2.00"	.78"	0.22	TT 409	TK 15
6921234	CC_32.5_	CC-09T3	2.00"	.78"	0.22	TT 409	TK 15



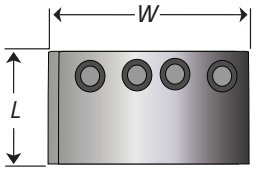

COUNTERWEIGHT

Part No.	Description	W	L	lbs
6921245	MB-CW	4.07"	2.36"	6.99

MACROBOHR LARGE HOLE BORING

pg. 204 pg. 206 pg. 216 pg. 229



FEATURES

- Maximum rigidity and accuracy
- CAT, BT, HSK100A spindles
- Nickel-chrome alloy steel ensures best reliablity and repeatability



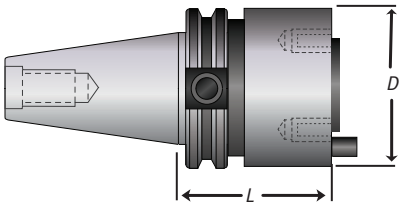

DIRECT MOUNT TOOLHOLDERS

Part No.	Description	D	L	lbs
6166124	CAT-550-160-W	3.93"	2.75"	12.45
6166123	BT-550-160	3.93"	2.75"	13.24
6166125	HSK-550-160	3.93"	3.14"	11.55

ADAPTER MOUNT TOOLHOLDERS

Part No.	Description	D	L	lbs
6141350	CAT-350-100-190-W	3.93"	4.48"	14.50
6141355	CAT-350-100-260-W	3.93"	7.24"	24.25
6141360	CAT-350-100-320-W	3.93"	9.60"	32.32
6150600	BT-350-100-170	3.93"	3.74"	12.74
6150625	BT-350-100-260	3.93"	7.95"	27.47
6150650	BT-350-100-320	3.93"	10.31"	35.45
6155108	HSK-100A-100-185	3.93"	4.48"	12.50



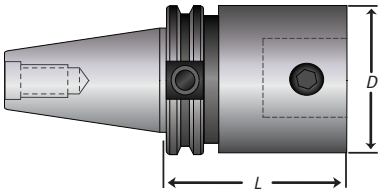

EXTENSIONS

Part No.	Description	D	L	lbs
6551080	P-100-80	3.93"	3.14"	10.10
6551012	P-100-120	3.93"	4.72"	15.56

(require adapter for large head mounting)



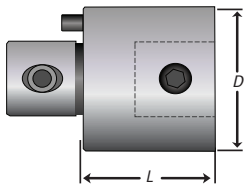

LARGE HEAD ADAPTER

Part No.	Description	D	L	lbs
6022510	ADT-100-50	3.93"	1.96"	9.61

(use with adapter mount holders)



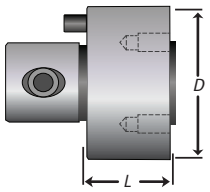

PINZBOHR SPEEDS & FEEDS GUIDELINES

ROUGH BORING WITH DUAL INSERTS

Material: Plain Carbon Steel

Dia. Range (inch)	Head Size	Max. Stock Removal on Dia.	Suggested Speeds & Feeds Speed SFM	Feed IPR
.944 - 1.181	22	0.38	320 - 420	.006 - .010
1.141 - 1.574	27	0.47	350 - 450	.006 - .012
1.535 - 1.968	32	0.56	350 - 500	.008 - .012
1.929 - 4.015	42, 54, 68	0.75	350 - 500	.010 - .014
3.935 - 20.00	85, 100, 200	0.84	350 - 500	.012 - .016
	300, 400, 500		350 - 500	.012 - .016

Material: Alloy Steels

.944 - 1.181	22	0.38	300 - 390	.006 - .010
1.141 - 1.574	27	0.47	320 - 420	.006 - .012
1.535 - 1.968	32	0.56	320 - 420	.008 - .012
1.929 - 4.015	42, 54, 68	0.75	320 - 420	.010 - .014
3.935 - 20.00	85, 100, 200	0.84	320 - 420	.012 - .016
	300, 400, 500		320 - 420	.012 - .016

Material: Stainless Steels

.944 - 1.181	22	0.38	200 - 300	.005 - .008
1.141 - 1.574	27	0.47	220 - 320	.006 - .010
1.535 - 1.968	32	0.56	220 - 320	.006 - .010
1.929 - 4.015	42, 54, 68	0.75	220 - 320	.008 - .012
3.935 - 20.00	85, 100, 200	0.84	220 - 320	.010 - .014
	300, 400, 500		220 - 320	.010 - .014

Material: Cast Iron

.944 - 1.181	22	0.38	200 - 350	.008 - .012
1.141 - 1.574	27	0.47	220 - 350	.010 - .014
1.535 - 1.968	32	0.56	220 - 350	.010 - .014
1.929 - 4.015	42, 54, 68	0.75	220 - 350	.012 - .016
3.935 - 20.00	85, 100, 200	0.84	220 - 350	.012 - .018
	300, 400, 500		220 - 350	.012 - .018

Material: Aluminum and Aluminum Alloys

.944 - 1.181	22	0.38	400 - 1000	.008 - .012
1.141 - 1.574	27	0.47	500 - 1200	.010 - .014
1.535 - 1.968	32	0.56	500 - 1200	.010 - .014
1.929 - 4.015	42, 54, 68	0.75	500 - 1200	.012 - .016
3.935 - 20.00	85, 100, 200	0.84	500 - 1200	.012 - .018
	300, 400, 500		500 - 1200	.012 - .018

Material: Titanium and High Temperature Alloys

.944 - 1.181	22	0.25	90 - 120	.005 - .008
1.141 - 1.574	27	0.32	100 - 130	.006 - .010
1.535 - 1.968	32	0.38	100 - 130	.006 - .010
1.929 - 4.015	42, 54, 68	0.50	100 - 130	.008 - .012
3.935 - 20.00	85, 100, 200	0.56	100 - 130	.008 - .014
	300, 400, 500		100 - 130	.008 - .014

FINISH BORING WITH SINGLE INSERTS

Material: Plain Carbon Steel

Dia. Range (inch)	Head Size	Max. Stock Removal on Dia.	Suggested Speeds & Feeds Speed SFM	Feed IPR
.944 - 1.181	22	.004 - .024	350 - 450	.002 - .006
1.141 - 1.574	27	.004 - .024	380 - 500	.002 - .006
1.535 - 1.968	32	.005 - .030	380 - 500	.002 - .006
1.929 - 4.015	42, 54, 68	.005 - .030	380 - 500	.004. - .008
3.935 - 20.00	85, 100, 200	.006 - .040	380 - 500	.004. - .008
	300, 400, 500	.006 - .040	380 - 500	.004. - .008

Material: Alloy Steels

.944 - 1.181	22	.004 - .024	320 - 420	.002 - .006
1.141 - 1.574	27	.004 - .024	350 - 450	.002 - .006
1.535 - 1.968	32	.005 - .030	350 - 480	.002 - .006
1.929 - 4.015	42, 54, 68	.005 - .030	350 - 480	.004. - .008
3.935 - 20.00	85, 100, 200	.006 - .040	350 - 480	.004. - .008
	300, 400, 500	.006 - .040	350 - 480	.004. - .008

Material: Stainless Steels

.944 - 1.181	22	.010 - .030	220 - 320	.003 - .006
1.141 - 1.574	27	.010 - .030	250 - 350	.003 - .006
1.535 - 1.968	32	.015 - .040	250 - 350	.003 - .006
1.929 - 4.015	42, 54, 68	.015 - .040	250 - 350	.004 - .008
3.935 - 20.00	85, 100, 200	.020 - .050	250 - 350	.005 - .008
	300, 400, 500	.020 - .050	250 - 350	.005 - .008

Material: Cast Iron

.944 - 1.181	22	.010 - .030	220 - 350	.003 - .006
1.141 - 1.574	27	.010 - .030	250 - 380	.003 - .006
1.535 - 1.968	32	.015 - .040	250 - 380	.003 - .006
1.929 - 4.015	42, 54, 68	.015 - .040	250 - 380	.005 - .008
3.935 - 20.00	85, 100, 200	.020 - .050	250 - 380	.005 - .008
	300, 400, 500	.020 - .050	250 - 380	.005 - .008

Material: Aluminum and Aluminum Alloys

.944 - 1.181	22	.010 - .030	500 - 1000	.002 - .006
1.141 - 1.574	27	.010 - .030	500 - 1200	.004 - .008
1.535 - 1.968	32	.015 - .040	500 - 1200	.004 - .008
1.929 - 4.015	42, 54, 68	.015 - .040	500 - 1200	.004 - .008
3.935 - 20.00	85, 100, 200	.020 - .050	500 - 1200	.004 - .010
	300, 400, 500	.020 - .050	500 - 1200	.004 - .010

Material: Titanium and High Temperature Alloys

.944 - 1.181	22	.010 - .030	100 - 130	.003 - .006
1.141 - 1.574	27	.010 - .030	100 - 150	.003 - .006
1.535 - 1.968	32	.015 - .040	100 - 150	.003 - .006
1.929 - 4.015	42, 54, 68	.015 - .040	100 - 150	.004 - .008
3.935 - 20.00	85, 100, 200	.020 - .050	100 - 150	.004 - .008
	300, 400, 500	.020 - .050	100 - 150	.004 - .008

PARTS FOR ROUGHING HEADS

pg. 204 pg. 206 pg. 216 pg. 229

Indexable cartridges and insert screws are on page 202.

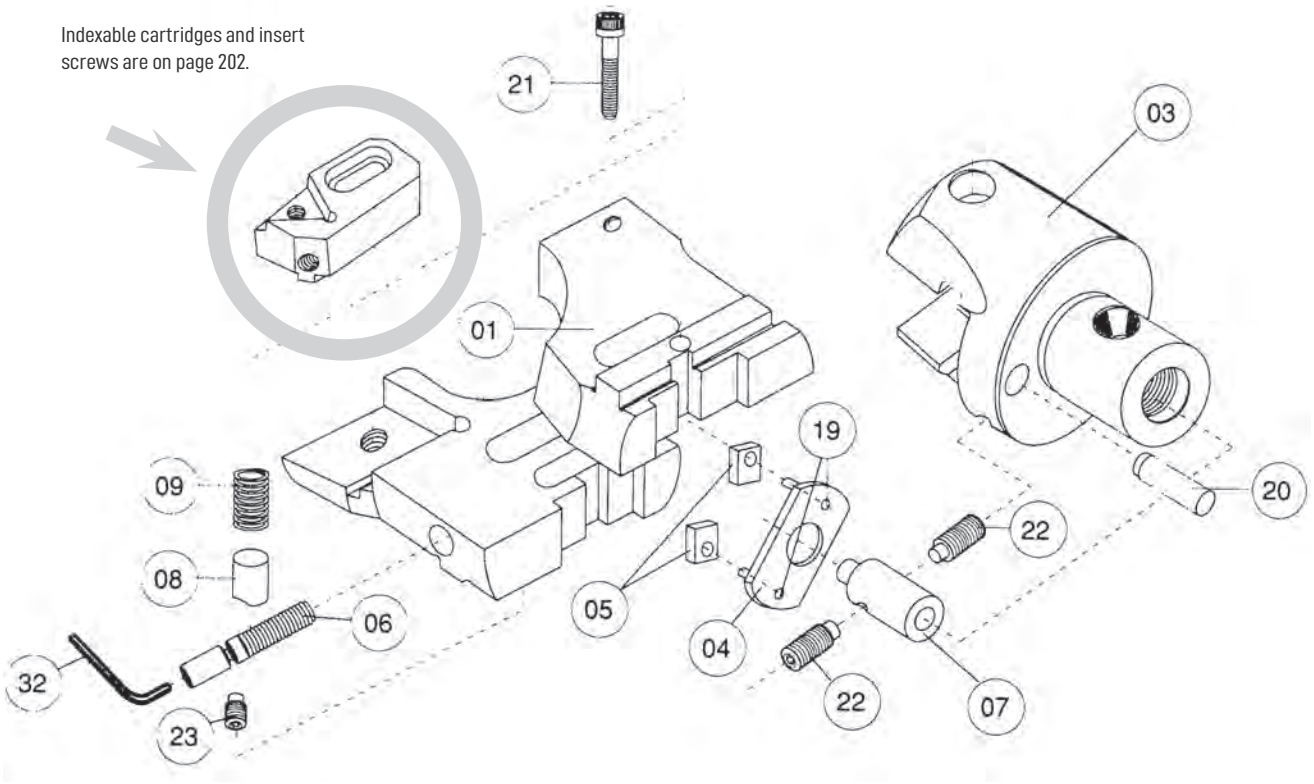

ROUGHING BORING HEADS INTEGRAL POCKET

Boring Heads	01	03	04	05	06	07	08	09	19	20	21	22	23
D 22.75_ _ _	D22.75.01._ _ _	D22 03	D22 04		D22 06	D22 07	D22 08	D22 09	D22 19	D22 20	D22 21	D22 22	D22 23
D 22.90_ _ _	D22.90.01._ _ _	D22 03	D22 04		D22 06	D22 07	D22 08	D22 09	D22 19	D22 20	D22 21	D22 22	D22 23
D 27.75_ _ _	D27.75.01._ _ _	D27 03	D27 04		D27 06	D22 07	D22 08	D27 09	D22 19	D27 20	D27 21	D27 22	D27 23
D 27.90_ _ _	D27.90.01._ _ _	D27 03	D27 04		D27 06	D22 07	D22 08	D27 09	D22 19	D27 20	D27 21	D27 22	D27 23
D 32.75_ _ _W	D32.75.01._ _ _	D32 03W	D32 04		D32 06	D32 07	D32 08	D32 09	D32 19	D32 20	D32 21	D32 22	D32 23
D 32.90_ _ _W	D32.90.01._ _ _	D32 03W	D32 04		D32 06	D32 07	D32 08	D32 09	D32 19	D32 20	D32 21	D32 22	D32 23
D 42.75_ _ _	D42.75.01._ _ _	D42 03	D42 04	D42 05	D42 06	D42 07	D42 08	D42 09	D22 20	D42 20	D42 21	D42 22	D42 23
D 42.90_ _ _	D42.90.01._ _ _	D42 03	D42 04	D42 05	D42 06	D42 07	D42 08	D42 09	D22 20	D42 20	D42 21	D42 22	D42 23
D 54.75_ _ _	D54.75.01._ _ _	D54 03	D54 04	D42 05	D54 06	D54 07	D54 08	D42 09	D22 20	D54 20	D54 21	D54 22	D42 23
D 54.90_ _ _	D54.90.01._ _ _	D54 03	D54 04	D42 05	D54 06	D54 07	D54 08	D42 09	D22 20	D54 20	D54 21	D54 22	D42 23

ROUGHING BORING HEADS CARTRIDGE TYPE

Boring Heads	01	03	04	05	06	07	08	09	19	20	21	22	23
D 68.2CT_ _ _	D68 01 2CT	D68 03	D68 04	D68 05	D68 06	D68 07	D68 08	D68 09	D68 19	D68 20	D68 21	D68 22	D68 23
D 85.3CT_ _ _	D85 01 3CT	D85 03	D85 04	D85 05	D85 06	D85 07	D85 08	D85 09	D85 19	D85 20	D85 21	D85 22	D85 23
D 100.3CT_ _ _	D100 01 3CT	D100 03	D100 04	D85 05	D100 06	D100 07	D100 08	D85 09	D85 19	D100 20	D100 21	D85 22	D85 23
D 200.3CT_ _ _	D200 01 3CT	D200 03	D100 04	D85 05	D200 06	D100 07	D100 08	D85 09	D85 19	D100 20	D100 21	D85 22	D85 23

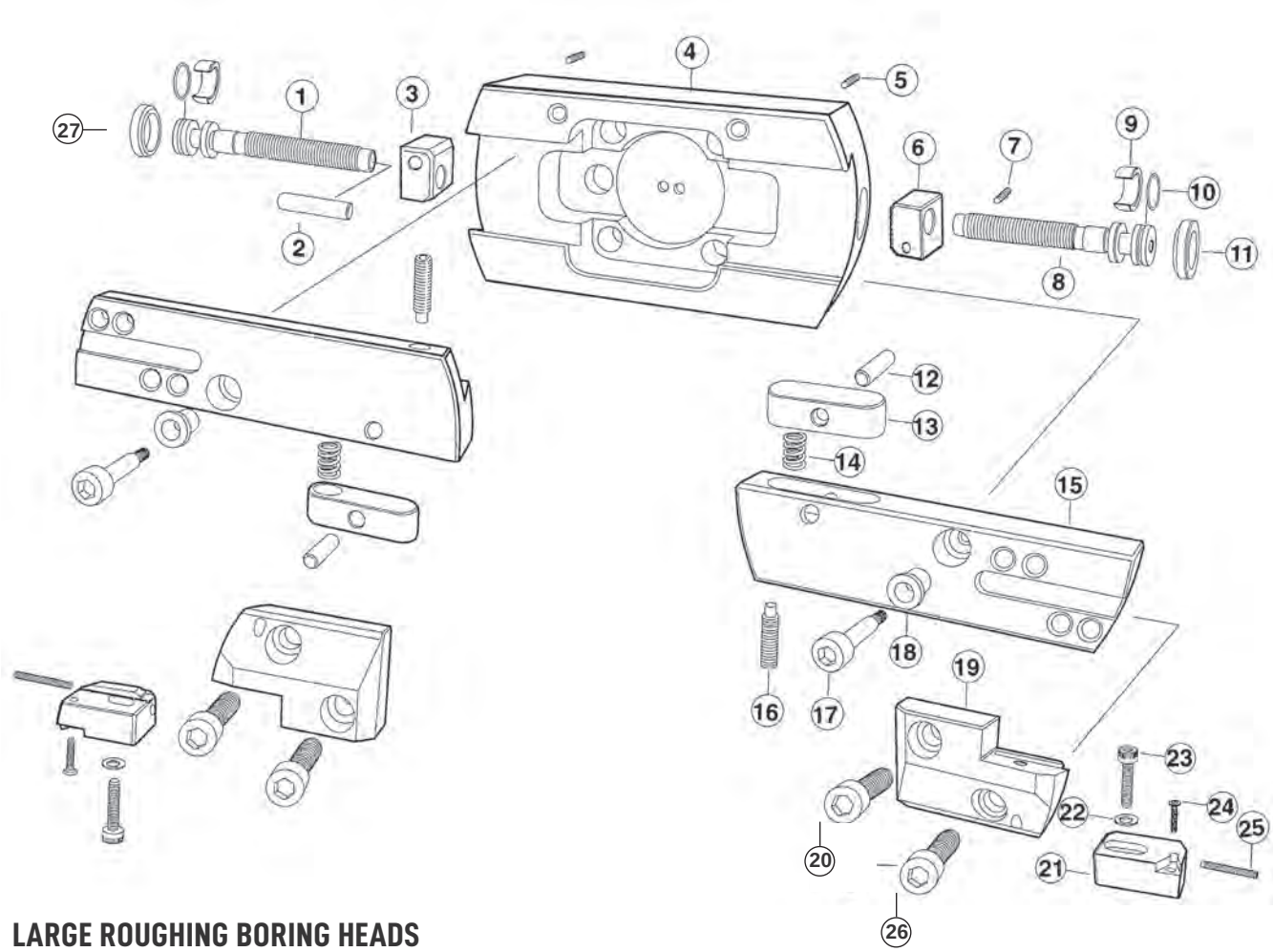

LARGE ROUGHING BORING HEADS

	Roughing Head Reference Number		
Spare Part	D 300W	D 400W	D 500W
1	D300.51W	D400.51W	D500.51W
2	D300.66	D300.66	D300.66
3	D300.55W	D300.55W	D300.55W
4	D300.03	D400.03	D500.03
5	D68.23	D68.23	D68.23
6	D300.54W	D300.54W	D300.54W
7	D300.65	D300.65	D300.65
8	D300.50W	D400.50W	D500.50W
9	A68.16	A68.16	A68.16
10	A68.25	A68.25	A68.25
11	D300.15	D300.15	D300.15
12	D300.60	D300.60	D300.60
13	D300.56	D300.56	D300.56

	Roughing Head Reference Number		
Spare Part	D 300W	D 400W	D 500W
14	D300.59	D300.59	D300.59
15	D300.01	D400.01	D500.01
16	D300.58	D300.58	D300.58
17	D300.57	D300.57	D300.57
18	D300.62	D300.62	D300.62
19	D300.49	D300.49	D300.49
20	D300.61	D300.61	D300.61
21	3CT._ _._ _ _	3CT._ _._ _ _	3CT._ _._ _ _
22	D68.28	D68.28	D68.28
23	D85.27	D85.27	D85.27
24	TT_ _ _ _ _	TT_ _ _ _ _	TT_ _ _ _ _
25	D85.29	D85.29	D85.29
26	D300.67	D300.67	D300.67
27	A68.15	A68.15	A68.15

PARTS FOR FINISHING HEADS

pg. 204 pg. 206 pg. 216 pg. 229

Indexable cartridges and insert screws are on page 202.

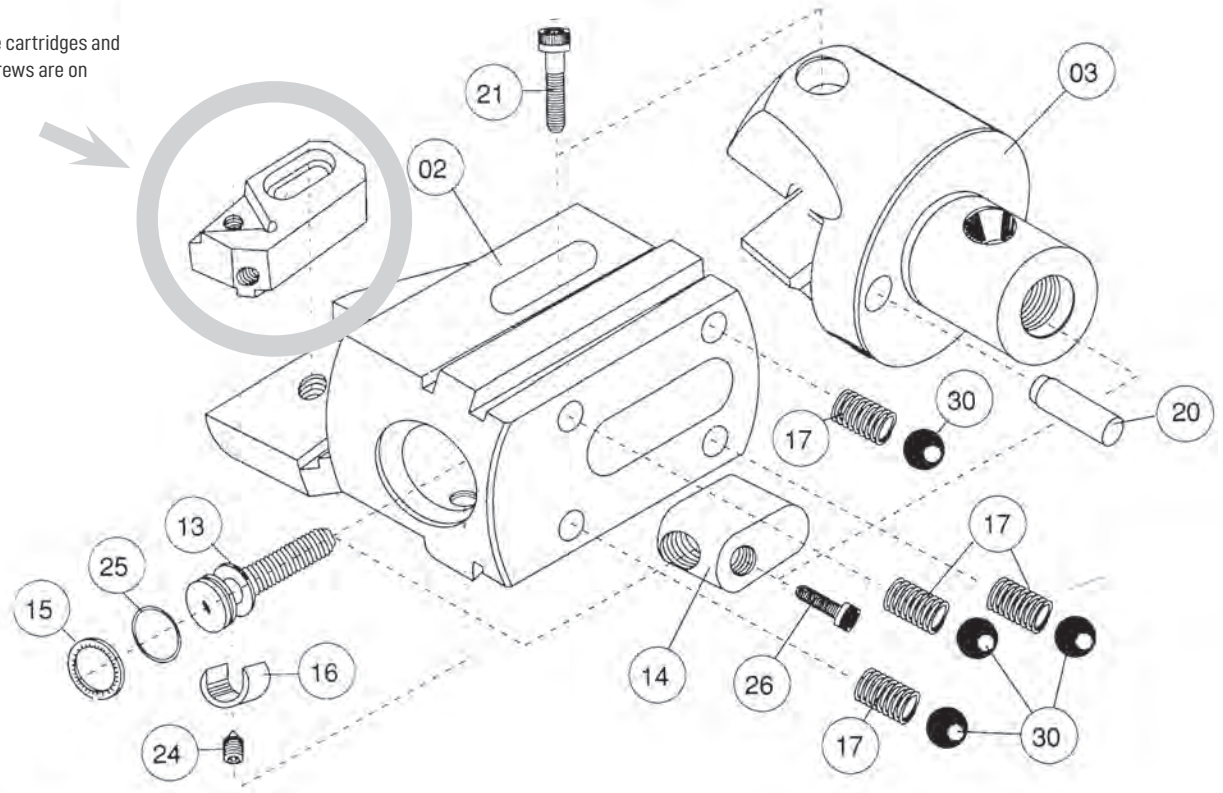

FINISHING BORING HEADS INTEGRAL POCKET

Boring Head	02	03	13	14	15	16	17	20	21	24	25	26	30
A 22.75_ _ _W	A22.75.02._ _ _	A22 03	A22 13W	A22 14W	A22 15	A22 16	A22 17	D22 20	D22 21	D22 23	A22 25	A22 26	A22 30
A 22.90_ _ _W	A22.90.02._ _ _	A22 03	A22 13W	A22 14W	A22 15	A22 16	A22 17	D22 20	D22 21	D22 23	A22 25	A22 26	A22 30
A 27.75_ _ _W	A27.75.02._ _ _	A27 03	A27 13W	A22 14W	A22 15	A22 16	A27 17	D27 20	D27 21	D27 23	A22 25	A27 26	A27 30
A 27.90_ _ _W	A27.90.02._ _ _	A27 03	A27 13W	A22 14W	A22 15	A22 16	A27 17	D27 20	D27 21	D27 23	A22 25	A27 26	A27 30
A 32.75_ _ _W	A32.75.02._ _ _	A32 03W	A32 13W	A32 14W	A32 15	A32 16	A27 17	D32 20	D32 21	D32 23	A22 25	A32 26	A27 30
A 32.90_ _ _W	A32.90.02._ _ _	A32 03W	A32 13W	A32 14W	A32 15	A32 16	A27 17	D32 20	D32 21	D32 23	A22 25	A32 26	A27 30
A 42.75_ _ _W	A42.75.02._ _ _	A42 03	A42 13W	A42 14W	A42 15	A42 16	A42 17	D42 20	D42 21	D42 23	A42 25	A42 26	A42 30
A 42.90_ _ _W	A42.90.02._ _ _	A42 03	A42 13W	A42 14W	A42 15	A42 16	A42 17	D42 20	D42 21	D42 23	A42 25	A42 26	A42 30
A 54.75_ _ _W	A54.75.02._ _ _	A54 03	A54 13W	A54 14W	A42 15	A42 16	D42 09	D54 20	D54 21	D42 23	A42 25	A42 26	A54 30
A 54.90_ _ _W	A54.90.02._ _ _	A54 03	A54 13W	A54 14W	A42 15	A42 16	D42 09	D54 20	D54 21	D42 23	A42 25	A42 26	A54 30

FINISHING BORING HEADS CARTRIDGE TYPE

Boring Head	02	03	13	14	15	16	17	20	21	24	25	26	30
A 68.2CT_ _ _W	A68 02 2CT	A68 03	A68 13W	A68 14W	A68 15	A68 16	A68 17	D68 20	D68 21	D68 23	A68 25	A68 26	A68 30
A 85.3CT_ _ _W	A85 02 3CT	A85 03	A85 13W	A85 14W	A85 15	A85 16	D85 09	D85 20	D85 21	D85 23	A85 25	A85 26	A85 30
A 100.3CT_ _ _W	A100 02 3CT	A100 03	A85 13W	A85 14W	A85 15	A85 16	D85 09	D100 20	D100 21	D85 23	A85 25	A85 26	A85 30
A 200.3CT_ _ _W	A200 02 3CT	A200 03	A200 13W	A85 14W	A85 15	A85 16	D85 09	D100 20	D100 21	D85 23	A85 25	A85 26	A85 30

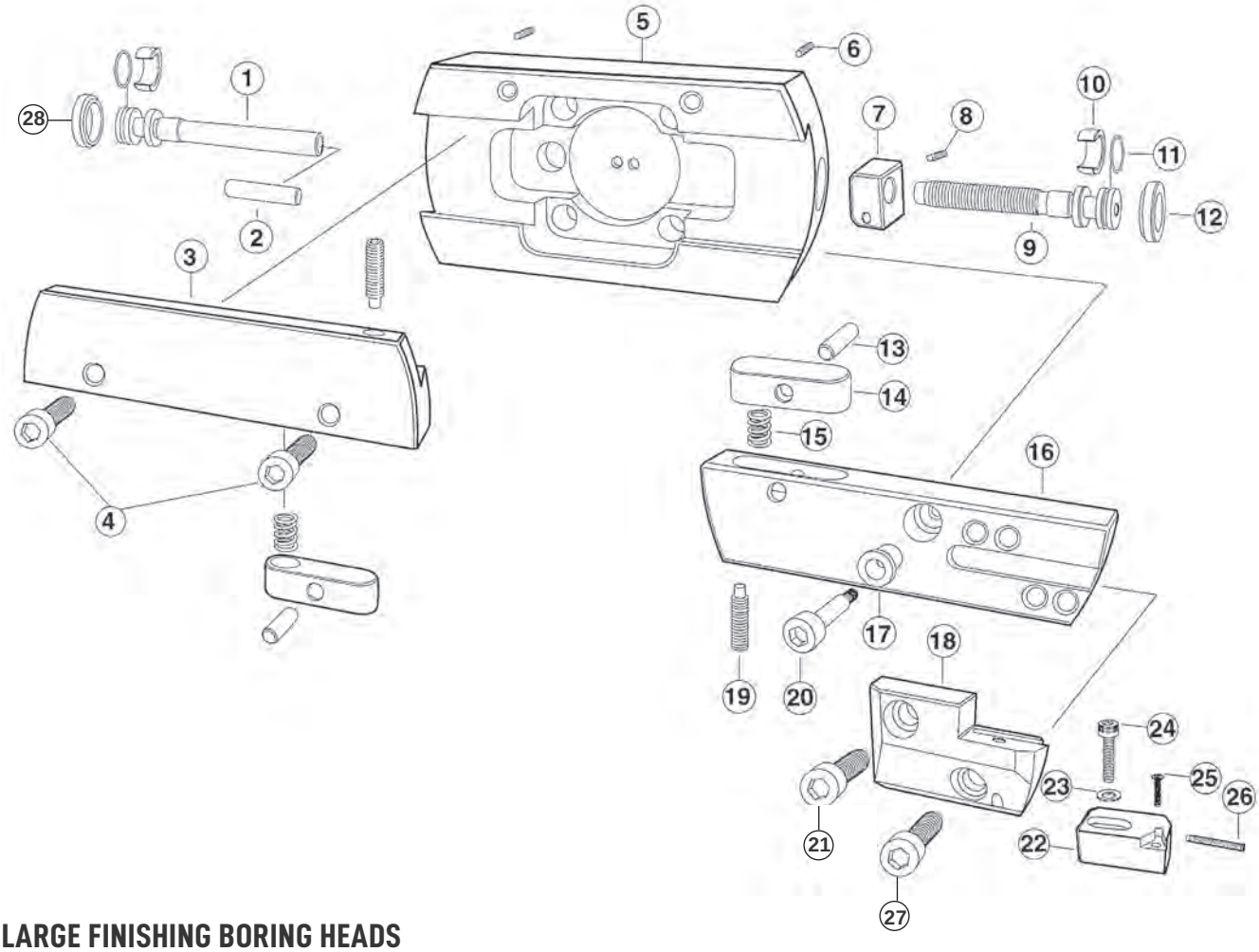

LARGE FINISHING BORING HEADS

Spare Part	Finishing Head Reference Number A 300W	A 400W	A 500W
1	A300.52W	A300.52W	A300.52W
2	D 300.66	D 300.66	D 300.66
3	A 300.02	A400.02	A500.02
4	A300.63	A300.63	A300.63
5	D300.03	D400.03	D500.03
6	D68.23	D68.23	D68.23
7	D300.54W	D300.54W	D300.54W
8	D300.65	D300.65	D300.65
9	D300.50W	D300.50W	D300.50W
10	A68.16	A68.16	A68.16
11	A68.25	A68.25	A68.25
12	D300.15	D300.15	D300.15
13	D300.60	D300.60	D300.60
14	D300.56	D300.56	D300.56

Spare Part	Finishing Head Reference Number A 300W	A 400W	A 500W
15	D300.59	D300.59	D300.59
16	D300.001	D400.001	D500.001
17	D300.62	D300.62	D300.62
18	D300.49	D300.49	D300.49
19	D300.58	D300.58	D300.58
20	D300.57	D300.57	D300.57
21	D300.61	D300.61	D300.61
22	3CT._ _._ _ _	3CT._ _._ _ _	3CT._ _._ _ _
23	D68.28	D68.28	D68.28
24	D85.27	D85.27	D85.27
25	TT_ _ _ _ _	TT_ _ _ _ _	TT_ _ _ _ _
26	D85.29	D85.29	D85.29
27	D300.67	D300.67	D300.67
28	A68.15	A68.15	A68.15

PINZBOHR BORING TOOL SELECTION GUIDE

pg. 204 pg. 206 pg. 216 pg. 229

Use the questions below to determine your tooling requirements. You can also fill out and email this information to us if you need assistance with your tooling selection: info@generalcuttingtools.com

Name _____

Company _____

Address _____

City _____ St_____ Zip _____

E-mail _____ Ph_____ Fax _____

1. What is the finish size of the hole? _____
   (Determines size of boring head.)
2. What is the tolerance of the finished hole?_____
   (Determines if you need rough or finish boring head.)
3. Is the starting hole forged, cast, drilled, or reamed? _____
   (Determines whether you need 75 or 90 degree boring head.)
4. What is the design of the bored hole?_____
   (Also determines degree of boring head.)
   a. Stepped bore
   b. Thru bore _____
5. What material are you machining? _____
   (Determines insert grade and chip breaker selection.)
6. What spindle type is on the machine? _____
   (Determines holder selection.)
7. How deep is the bore? _____
   (Determines length of holder and extensions.)
8. Do you require any extra reach for fixturing or other reasons? _____
9. Does your machine have coolant-thru capability?_____

Misc: Select coolant option based on connection diameter and bore depth requirements (question #6 above).

KEY TO BORING HEAD DESCRIPTIONS

A 22 75 400 **A** = finish heads, **D** = rough heads (see question #2 above)



22 = connection diameter (see question #1 above)

75 = approach angle (see question #3 above)

400 = insert style or CT cartridge (see question #5 above)

KEY TO BORING TOOLHOLDER DESCRIPTIONS

CT 330 or 350 22 100

CT = type of spindle (see question #6 above)

330 = taper size (see question #6 above)

22 = connection diameter (match head connection)

100 = boring depth (BD) (see question #7 above)

