EXTREME PRECISION HYDRAULIC HOLDERS

HOLDING POWER AND ACCURACY FOR ALL TYPES OF APPLICATIONS.



TRITON

TRITON HYDRAULIC HOLDERS

THE NEW FORCE IN HYDRAULIC CHUCK TECHNOLOGY!

- Newly designed hydraulic system provides 3.5X clamping force of standard hydraulic chucks
- Bore wall is up to 74% thicker than standard hydraulic holders, for improved rigidity in heavy stock removal applications
- Excellent vibration damping properties enhances surface finishes and extends tool life
- Use reduction sleeves to hold any shank diameter



SLIM HYDRAULIC HOLDERS

MOST EXTENSIVE RANGE OF ON-SIZE HYDRAULIC HOLDERS.

- Narrow body design for better clearance
- Maximum T.IR. of 0.0001" at 3X diameter
- AD/B CoolFLEX coolant delivery standard

Available in: CAT40 | CAT50 | BT30 | BT40
HSK63A | HSK100A | HSK63F

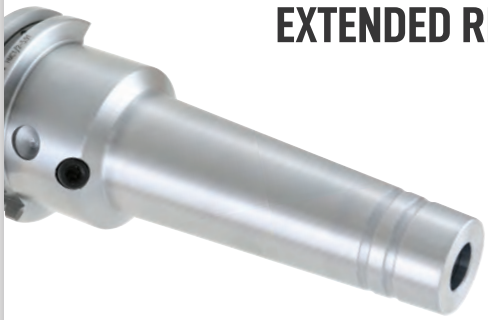

EXTENDED REACH HYDRAULIC HOLDERS

- Narrow nose diameter for best clearance in close tolerance applications
- Tapered body design enhances rigidity
- Excellent for mold work or anytime you need superior surface finish and accurate cutting at extended lengths



TRITON HYDRAULIC CHUCKS

- Featuring a newly designed hydraulic bladder system Triton provides 3.5X clamping force of standard hydraulic chucks
- Bore wall thickness is up to **74%** thicker than standard hydraulic holders for improved rigidity in heavy stock removal applications
- Excellent vibration damping properties improves surface finishe and tool life
- Use reduction sleeves for any shank diameter

Think hydraulic chucks are just for light milling or finishing passes? THINK AGAIN!

The NEW Triton Chucks by Techniks harness the full power of hydraulic technology to provide unmatched holding power and accuracy!

A newly designed hydraulic system enhances holding power on the tool shank by 350% vs. standard hydraulic chucks.

Unleash the Hydraulic Power of Triton Chucks!

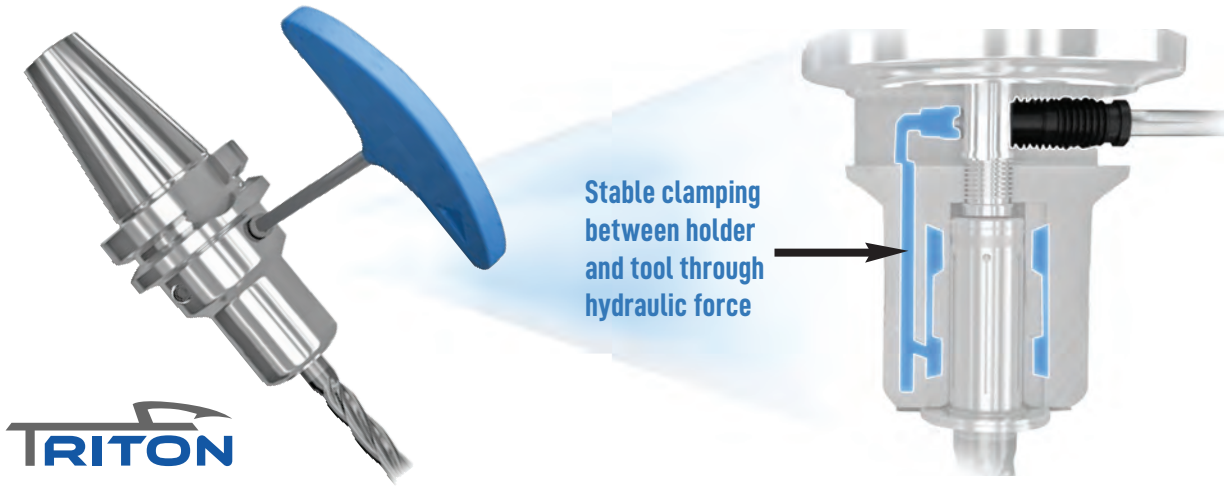



TRITON HYDRAULIC CHUCKS

- Triton's hydraulic design provides excellent vibration damping properties, so tools run longer and quieter and produce superior surface finishes
- Tool changes are a snap! Only require hex wrench – NO tightening fixtures or torque wrenches needed
- Triton chucks are charged with hydraulic fluid in a vacuum chamber to eliminate air and gas from the system. Coupled with a redesigned oil sealing system, Triton chucks are built to provide maximum holding power for years!
- Use reduction sleeves to hold any shank diameter
- H-LOCKED reduction sleeves are manufactured with patented TTG-594 for unmatched holding power

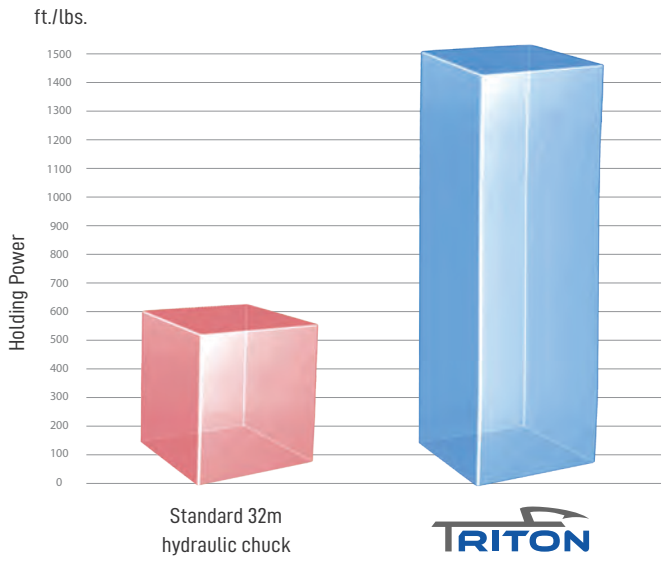

350%

GREATER HOLDING POWER THAN STANDARD HYDRAULIC CHUCKS!

TRITON HYDRAULIC HOLDERS

pg. 229 pg. 236 pg. 238



FEATURES

- 3.5X clamping force of standard hydraulic chucks
- 74% thicker bore walls improve rigidity in heavy material removal applications
- Excellent vibration dampening properties enhances surface finish and extends tool life

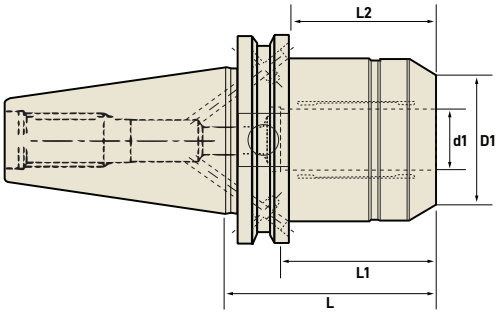

CAT 40 TRITON HYDRAULIC CHUCKS

Part No.	Description	d1	D1	L	L1	L2	Thread
254750	CAT40 x 3/4" – 2.54" Triton Chuck	3/4"	1.94"	2.54"	1.79"	1.89"	M8x1.0
354750	CAT40 x 3/4" – 4" Triton Chuck	3/4"	1.94"	4"	3.25"	1.89"	M8x1.0
254020	CAT40 x 20mm – 64.5mm Triton Chuck	20mm	49.2mm	64.5mm	45.4mm	48mm	M8x1.0
354020	CAT40 x 20mm – 101.6mm Triton Chuck	20mm	49.2mm	101.6mm	82.6mm	48mm	M8x1.0

CAT40 TRITON HYDRAULIC CHUCKS DUALDRIVE

Part No.	Description	d1	D1	L	L1	L2	Thread
264750	CAT40 x 3/4" – 2.54" Triton Chuck w/ DualDRIVE	3/4"	1.94"	2.54"	1.79"	1.89"	M8x1.0
364750	CAT40 x 3/4" – 4" Triton Chuck w/ DualDRIVE	3/4"	1.94"	4"	3.25"	1.89"	M8x1.0
264020	CAT40 x 20mm – 64.5mm Triton Chuck w/ DualDRIVE	20mm	49.2mm	64.5mm	45.4mm	48mm	M8x1.0
364020	CAT40 x 20mm – 101.6mm Triton Chuck w/ DualDRIVE	20mm	49.2mm	101.6mm	82.6mm	48mm	M8x1.0

CAT50 TRITON HYDRAULIC CHUCKS

Part No.	Description	d1	D1	L	L1	L2	Thread
255750	CAT50 x 3/4" – 3.19" Triton Chuck	3/4"	1.94"	3.19"	2.44"	1.89"	M8x1.0
255125	CAT50 x 1-1/4" – 3.19" Triton Chuck	1-1/4"	2.84"	3.19"	2.44"	2.24"	M8x1.0
355125	CAT50 x 1-1/4" – 6" Triton Chuck	1-1/4"	2.84"	6"	5.25"	2.24	M8x1.0
255032	CAT50 x 32mm – 81mm Triton Chuck	32mm	72mm	81mm	61.9mm	48mm	M8x1.0
355032	CAT50 x 32mm – 152.4mm Triton Chuck	32mm	72mm	152.4mm	133.4mm	56.5mm	M8x1.0

TRITON HYDRAULIC HOLDERS

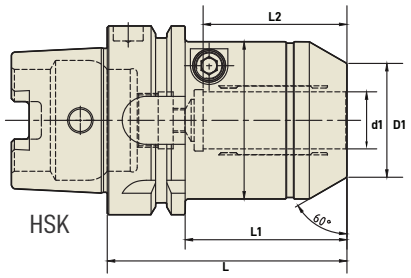

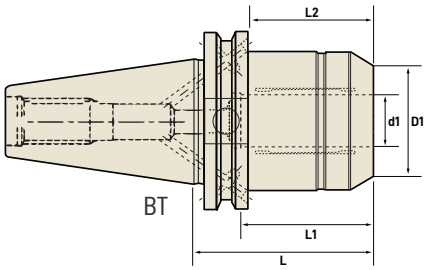

HSK63A TRITON HYDRAULIC CHUCKS

Part No.	Description	d1	D1	L	L1	L2	Thread
257750	HSK63A x 3/4" - 3.15" Triton Chuck	3/4"	2.07"	3.15"	2.13"	1.89"	M8x1.0
357750	HSK63A x 3/4" - 5.12" Triton Chuck	3/4"	2.07	5.12"	4.09"	1.89"	M8x1.0
257020	HSK63A x 20mm - 80mm Triton Chuck	20mm	52.5mm	80mm	54mm	48mm	M8x1.0

HSK100A TRITON HYDRAULIC CHUCKS

Part No.	Description	d1	D1	L	L1	L2	Thread
259125	HSK100A x 1-1/4" - 3.94" Triton Chuck	1-1/4"	2.3"	5.12"	3.98"	2.24"	M8x1.0
259020	HSK100A x 20mm - 90mm Triton Chuck	20mm	52.5mm	90mm	61mm	48mm	M8x1.0
259032	HSK100A x 32mm - 100mm Triton Chuck	32mm	58.5mm	100mm	80mm	57mm	M8x1.0

BT30 TRITON HYDRAULIC CHUCKS

Part No.	Description	d1	D1	L	L1	L2	Thread
253750	BT30 x 3/4" - 3.54" Triton Chuck	3/4"	1.65"	3.54"	2.68"	1.89"	M8x1.0
253020	BT30 x 20mm - 90mm Triton Chuck	20mm	42mm	90mm	68mm	48mm	M8x1.0

BT30 TRITON HYDRAULIC CHUCKS DUALDRIVE

Part No.	Description	d1	D1	L	L1	L2	Thread
263750	BT30 x 3.4" - 3.54" Triton Chuck w/DualDRIVE	3/4"	1.65"	3.54"	2.68"	1.89"	M8x1.0
263020	BT30 x 20mm - 90mm Triton Chuck w/ DualDRIVE	20mm	42mm	90mm	68mm	48mm	M8x1.0

BT40 TRITON HYDRAULIC CHUCKS

Part No.	Description	d1	D1	L	L1	L2	Thread
256750	BT40 x 3.4" - 2.85" Triton Chuck	3/4"	1.94"	2.85"	1.79"	1.89"	M8x1.0
256020	BT40 x 20mm - 72.5mm Triton Chuck	20mm	49.2mm	72.5mm	45.5mm	48mm	M8x1.0

BT40 TRITON HYDRAULIC CHUCKS DUALDRIVE

Part No.	Description	d1	D1	L	L1	L2	Thread
266750	BT40 x 3.4" - 2.85" Triton Chuck w/ DualDRIVE	3/4"	1.94"	2.85"	1.79"	1.89"	M8x1.0
266020	BT40 x 20mm - 72.5mm Triton Chuck w/ DualDRIVE	20mm	49.2mm	72.5mm	1.79"	1.89"	M8x1.0

CAT40 SLIM & EXTENDED HYDRAULIC HOLDERS

pg. 229 pg. 236 pg. 238



Slim Style

Extended Style

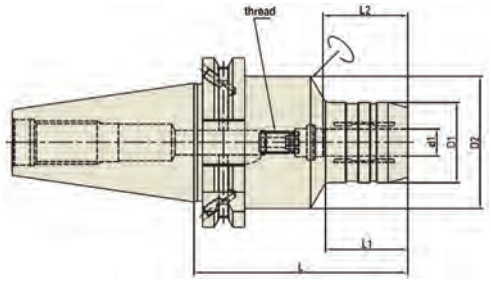

CAT40 SLIM HYDRAULIC HOLDERS

Part No.	Description	d1	D1	D2	L	L1	L2	Thread
154500	CAT40 AD/B x HC 1/2"S - 2.52"	1/2"	1.654"	-	2.520"	-	1.457"	M10x1.0
154625	CAT40 AD/B x HC 5/8"S - 2.52"	5/8"	1.339"	1.772"	2.520"	-	1.654"	M12x1.0
154750	CAT40 AD/B x HC 3/4"S - 2.52"	3/4"	1.496"	1.969"	2.520"	-	1.654"	M16x1.0
154100	CAT40 AD/B x HC 1"S - 3.5"	1"	2.244"	2.598"	3.504"	-	1.890"	M16x1.0
154060	CAT40 AD/B x HC 6mmS - 80.5mm	6mm	26mm	50mm	80.5mm	20mm	27mm	M5x0.8
154080	CAT40 AD/B x HC 8mmS - 80.5mm	8mm	28mm	50mm	80.5mm	30mm	37mm	M12x1.0
154010	CAT40 AD/B x HC 10mmS - 80.5mm	10mm	30mm	50mm	80.5mm	32mm	32mm	M8x1.0
154012	CAT40 AD/B x HC 12mmS - 80.5mm	12mm	32mm	50mm	80.5mm	32mm	37mm	M10x1.0
154016	CAT40 AD/B x HC 16mmS - 80.5mm	16mm	38mm	50mm	80.5mm	33mm	42mm	M12x1.0
154020	CAT40 AD/B x HC 20mmS - 64.5mm	20mm	37mm	50mm	64.5mm	34mm	42mm	M16x1.0
154200	CAT40 AD/B x HC 20mmS - 80.5mm	20mm	42mm	50mm	80.5mm	34mm	42mm	M16x1.0

CAT40 EXTENDED REACH HYDRAULIC HOLDERS

Part No.	Description	d1	D1	D2	L	L1	L2	Thread
854022	CAT40 AD/B x HMC 1/4" - 4.72"	1/4"	.787"	1.969"	4.724"	2.756"	1.063"	M5x0.8
854024	CAT40 AD/B x HMC 1/4" - 5.91"	1/4"	.787"	1.969"	5.906"	3.937"	1.063"	M5x0.8
854028	CAT40 AD/B x HMC 3/8" - 4.72"	3/8"	.945"	1.969"	4.724"	2.756"	1.260"	M8x1.0
854030	CAT40 AD/B x HMC 3/8" - 5.91"	3/8"	.945"	1.969"	5.906"	3.937"	1.260"	M8x1.0
854032	CAT40 AD/B x HMC 1/2" - 4.72"	1/2"	1.024"	1.969"	4.724"	2.756"	1.457"	M10x1.0
854034	CAT40 AD/B x HMC 1/2" - 5.91"	1/2"	1.024"	1.969"	5.906"	3.937"	1.457"	M10x1.0
854036	CAT40 AD/B x HMC 5/8" - 4.72"	5/8"	1.260"	1.969"	4.724"	2.756"	1.654"	M12x1.0
854038	CAT40 AD/B x HMC 5/8" - 5.91"	5/8"	1.260"	1.969"	5.906"	3.937"	1.654"	M12x1.0
854040	CAT40 AD/B x HMC 3/4" - 4.72"	3/4"	1.339"	1.969"	4.724"	2.756"	1.654"	M16x1.0
854042	CAT40 AD/B x HMC 3/4" - 5.91"	3/4"	1.339"	1.969"	5.906"	3.937"	1.654"	M16x1.0

CAT50 / BT30 / BT40 SLIM HYDRAULIC HOLDERS

CAT50 SLIM HYDRAULIC HOLDERS

Part No.	Description	d1	D1	D2	L	L1	L2	Thread
155750	CAT50 AD/B x HC 3/4"S - 3.19"	3/4"	2.205"	2756"	3.189"	0	1.654"	M16x1.0
155100	CAT50 AD/B x HC 1"S - 3.19"	1"	2.165"	2.765"	3.189"	0	1.890"	M16x1.0
155125	CAT50 AD/B x HC 1-1/4"S - 3.19"	1-1/4"	2.165"	2.765"	3.189"	0	2.165"	M16x1.0
155060	CAT50 AD/B x HC 6mmS - 80.5mm	6mm	26mm	50mm	80.5mm	30mm	27mm	M5x0.8
155080	CAT50 AD/B x HC 8mmS - 80.5mm	8mm	28mm	50mm	80.5mm	30mm	27mm	M12x1.0
155010	CAT50 AD/B x HC 10mmS - 80.5mm	10mm	30mm	50mm	80.5mm	32mm	32mm	M8x1.0
155012	CAT50 AD/B x HC 12mmS - 80.5mm	12mm	32mm	50mm	80.5mm	35mm	37mm	M10x1.0
155016	CAT50 AD/B x HC 16mmS - 80.5mm	16mm	38mm	50mm	80.5mm	40mm	42mm	M12x1.0
155200	CAT50 AD/B x HC 20mmS - 80.5mm	20mm	42mm	50mm	80.5mm	40mm	42mm	M16x1.0



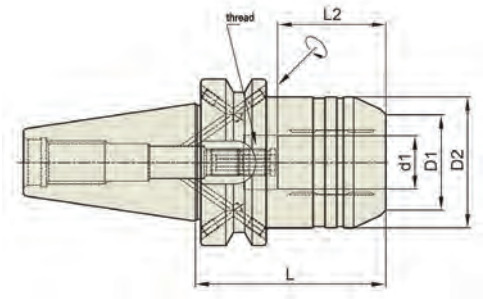

BT30 SLIM HYDRAULIC HOLDERS

Part No.	Description	d1	D1	D2	L	L1	L2	Thread
153250	BT30 AD/B x HC 1/4"S - 2.75"	1/4"	1.024"	1.772"	2.756"	1.142"	1.063"	M5x0.8
153312	BT30 AD/B x HC 5/16"S - 2.75"	5/16'	1.102"	1.772"	2.756"	1.181"	1.063"	M6x1.0
153375	BT30 AD/B x HC 3/8"S - 2.95"	3/8"	1.181"	1.772"	2.953"	1.220"	1.260"	M8x1.0
153500	BT30 AD/B x HC 1/2"S - 3.35"	1/2"	1.260"	1.772"	3.346"	1.575"	1.457"	M10x1.0
153675	BT30 AD/B x HC 5/8"S - 3.54"	5/8"	1.496"	1.772"	3.543"	1.811"	1.654"	M6x1.0
153750	BT30 AD/B x HC 3/4"S - 3.54"	3/4"	1.654'	1.772"	3.543"	1.890"	1.654"	M6x1.0

BT40 SLIM HYDRAULIC HOLDERS

Part No.	Description	d1	D1	D2	L	L1	L2	Thread
156250	BT40 AD/B x HC 1/4"S - 3.54"	1/4"	1.024"	1.772"	3.543"	1.181"	1.063"	M5x0.8
256312	BT40 AD/B x HC 5/16"S - 3.54"	5/16"	1.102"	1.772"	3.543"	1.299"	1.063"	M6x1.0
156375	BT40 AD/B x HC 3/8"S - 3.54"	3/8"	1.181"	1.772"	3.543"	1.260"	1.260"	M8x1.0
156500	BT40 AD/B x HC 1/2"S - 3.54"	1/2"	1.260"	1.772"	3.543"	1.378"	1.457"	M10x1.0
156625	BT40 AD/B x HC 5/8"S - 3.54"	5/8"	1.496"	1.890"	3.543"	1.575"	1.654"	M12x1.0
156750	BT40 AD/B x 3/4"S - 3.54"	3/4"	1.654"	1.890"	3.543"	1.575"	1.654"	M16x1.0
156100	BT40 AD/B x HC 1"S - 3.94"	1"	1.969"	2.362"	3.937"	1.772"	1.890"	M16x1.0

HS63A/F SLIM & EXTENDED HYDRAULIC HOLDERS

pg. 229 pg. 236 pg. 238



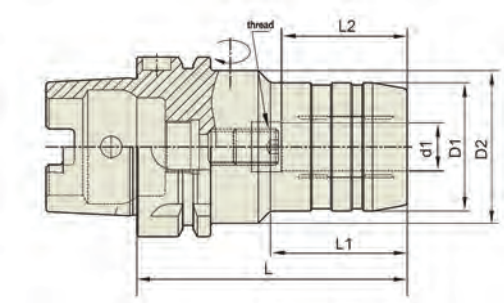

HSK63A SLIM HYDRAULIC HOLDERS

Part No.	Description	d1	D1	D2	L	L1	L2	Thread
157250	HSK63A x HC 1/4"S - 2.76"	1/4"	1.024"	1.969"	2.756"	.945"	1.063"	M5x0.8
157500	HSK63A x HC 1/2"S - 3.35"	1/2"	1.260"	1.969"	3.346"	1.575"	1.457"	M10x1.0
157750	HSK63A x HC 3/4"S - 3.54"	3/4"	1.654"	1.969"	3.543"	1.890"	1.654"	M16x1.0
157100	HSK63A x HC 1"S - 4.72"	1"	2.244"	2.480"	4.724"	2.323"	1.890"	M16x1.0
157125	HSK63A x HC 1-1/4"S - 4.92"	1-1/4"	2.520"	2.953"	4.921"	2.480"	2.165"	M16x1.0
157060	HSK63A x HC 6mmS - 70mm	6mm	26mm	50mm	70mm	24mm	27mm	M5x0.8
157080	HSK63A x HC 8mmS - 70mm	8mm	28mm	50mm	70mm	25mm	27mm	M6x1.0
157010	HSK63A x HC 10mmS - 80mm	10mm	30mm	50mm	80mm	35mm	32mm	M8x1.0
157012	HSK63A x HC 12mmS - 85mm	12mm	32mm	50mm	85mm	40mm	37mm	M10x1.0
157014	HSK63A x HC 14mmS - 85mm	14mm	34mm	50mm	85mm	40mm	37mm	M10x1.0
157016	HSK63A x HC 16mmS - 90mm	16mm	38mm	50mm	90mm	46mm	42mm	M12x1.0
157018	HSK63A x HC 18mmS - 90mm	18mm	40mm	50mm	90mm	47mm	42mm	M12x1.0
157200	HSK63A x HC 20mmS - 80mm	20mm	53mm	53mm	80mm	47mm	42mm	M16x1.0
157020	HSK63A x HC 20mmS - 90mm	20mm	42mm	50mm	90mm	48mm	42mm	M16x1.0
157025	HSK63A x HC 25mmS - 120mm	25mm	57mm	63mm	120mm	59mm	48mm	M16x1.0
157032	HSK63A x HC 32mmS - 125mm	32mm	64mm	75mm	125mm	63mm	55mm	M16x1.0

HSK63A EXTENDED REACH HYDRAULIC HOLDERS

Part No.	Description	d1	D1	D2	L	L1	L2	Thread
158250	HSK63A x HMC 1/4" - 5.71"	1/4"	.787"	1.969"	5.709"	3.543"	1.063"	M5x0.8
158312	HSK63A x HMC 5/16" - 5.71"	5/16"	.866"	1.969"	5.709"	3.543"	1.063"	M6x1.0
158375	HSK63A x HMC 3/8" - 5.71"	3/8"	.945"	1.969"	5.709"	3.543"	1.063"	M8x1.0
158500	HSK63A x HMC 1/2" - 5.71"	1/2"	1.024"	1.969"	5.709"	3.543"	1.063"	M10x1.0
158625	HSK63A x HMC 5/8" - 5.71"	5/8"	1.260"	1.969"	5.709"	3.543"	1.063"	M12x1.0
158750	HSK63A x HMC 3/4" - 5.71"	3/4"	1.339"	1.969"	5.709"	3.543"	1.063"	M16x1.0
157220	HSK63A x HMC 20mm - 145mm	20mm	34mm	53mm	145mm	90mm	42mm	M16x1.0

HSK63F SLIM HYDRAULIC HOLDERS

Part No.	Description	d1	D1	D2	L	L1	L2	Thread
160750	HSK63F x HC 3/4"S - 3.35"	3/4"	1.654"	1.969"	3.346"	1.693"	1.654"	M16x1.0
160100	HSK63F x HC 1"S - 4.72"	1"	2.244"	2.480"	4.724"	2.323"	1.575"	M16x1.0

HSK100A SLIM HYDRAULIC HOLDERS



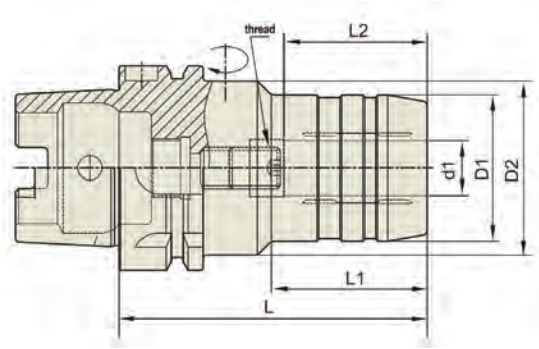

HSK100A SLIM HYDRAULIC HOLDERS

Part No.	Description	d1	D1	D2	L	L1	L2	Thread
159250	HSK100A x HC 1/4"S - 2.95"	1/4"	1.024"	1.969"	2.953"	.945"	1.063"	M5x0.8
159375	HSK100A x HC 3/8"S - 3.54"	3/8"	1.181"	1.969"	3.543"	1.654"	1.260"	M8x1.0
159500	HSK100A x HC 1/2"S - 3.74"	1/2"	1.260"	1.969"	3.740"	1.850"	1.457"	M10x1.0
159750	HSK100A x HC 3/4"S - 4.13"	3/4"	1.654"	1.969"	4.133"	2.322"	1.654"	M16x1.0
159100	HSK100A x HC 1"S - 4.33"	1"	2.244"	2.480"	4.331"	2.441"	1.890"	M16x1.0
159125	HSK100A x HC 1-1/4"S - 4.33"	1-1/4"	2.520"	2.953"	4.331"	2.441"	2.165"	M16x1.0
159200	HSK100A x HC 20mmS - 90mm	20mm	42mm	50mm	90mm	47mm	42mm	M16x1.0



Extended Reach

Extended length hydraulic holders are a great choice for mould work, or any time you need smooth, accurate cutting at extended lengths.

Fast Tool Changes

Fast tool changes are performed with just a twist of a wrench (included). Reduction sleeves fit virtually any shank size.

Techniks hydraulic holders have the holding power and accuracy for all types of applications.

Drilling

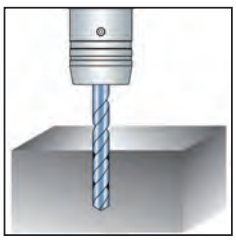

Face & Edge milling

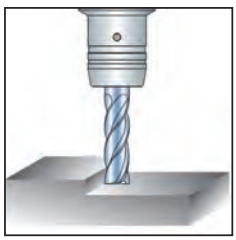

Chamfering

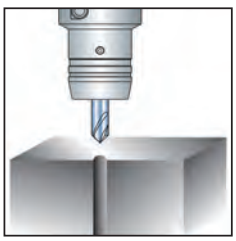

Reaming

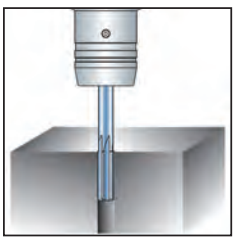

REDUCTION SLEEVES FOR HYDRAULIC CHUCKS

pg. 229 pg. 236 pg. 238



FEATURES

- I.D. sizes of 1/2" or 12mm and above are H-LOCKED with our patented TTG-594 compound to create the world's strongest gripping force of any hydraulic chuck
- Maximum 0.0001" T.I.R.
- Sealed for coolant-through applications

H-LOCKED WITH TTG-594™

Unleash the full power of your CNC machine and cutting tool with the strongest gripping connection.

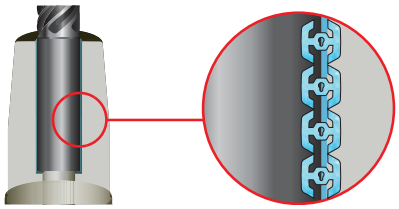

Our proprietary TTG-594 compound is embedded in the I.D. bore of the sleeve, creating millions of microscopic teeth adding bite to the cutting tool/tool holder connection.

1/2" O.D. Reduction Sleeves

Part No.	Description, O.D. - I.D.
620108	1/2" - 1/8" Reduction Sleeve
620104	1/2" - 1/4" Reduction Sleeve
620316	1/2" - 3/16" Reduction Sleeve
620516	1/2" - 5/16" Reduction Sleeve

20mm O.D. Reduction Sleeves

Part No.	Description, O.D. - I.D.
820030	20mm - 3mm Reduction Sleeve
820040	20mm - 4mm Reduction Sleeve
820050	20mm - 5mm Reduction Sleeve
820060	20mm - 6mm Reduction Sleeve
820080	20mm - 8mm Reduction Sleeve
820100	20mm - 10mm Reduction Sleeve
820120	20mm - 12mm Reduction Sleeve
820140	20mm - 14mm Reduction Sleeve
820160	20mm - 16mm Reduction Sleeve
520108	20mm - 1/8" Reduction Sleeve
520316	20mm - 3/16" Reduction Sleeve
520104	20mm - 1/4" Reduction Sleeve
520516	20mm - 5/16" Reduction Sleeve
520308	20mm - 3/8" Reduction Sleeve
520102	20mm - 1/2" Reduction Sleeve
520508	20mm - 5/8" Reduction Sleeve

*Blue shade = H-LOCKED

1-1/4" O.D. Reduction Sleeves

Part No.	Description, O.D. - I.D.
632108	1-1/4" - 1/8" Reduction Sleeve
632316	1-1/4" - 3/16" Reduction Sleeve
632104	1-1/4" - 1/4" Reduction Sleeve
632516	1-1/4" - 5/16" Reduction Sleeve
632308	1-1/4" - 3/8" Reduction Sleeve
632102	1-1/4" - 1/2" Reduction Sleeve
632508	1-1/4" - 5/8" Reduction Sleeve
632304	1-1/4" - 3/4" Reduction Sleeve
632100	1-1/4" - 1" Reduction Sleeve
632787	1-1/4" - 20mm Reduction Sleeve
632984	1-1/4" - 25mm Reduction Sleeve

*Blue shade = H-LOCKED

32mm O.D. Reduction Sleeves

Part No.	Description, O.D. - I.D.
832060	32mm - 6mm Reduction Sleeve
832080	32mm - 8mm Reduction Sleeve
832100	32mm - 10mm Reduction Sleeve
832120	32mm - 12mm Reduction Sleeve
832140	32mm - 14mm Reduction Sleeve
832160	32mm - 16mm Reduction Sleeve
832180	32mm - 18mm Reductino Sleeve
832200	32mm - 20mm Reduction Sleeve
832250	32mm - 25mm Reduction Sleeve

*Blue shade = H-LOCKED

3/4" O.D. Reduction Sleeves

Part No.	Description, O.D. - I.D.
625108	3/4" - 1/8" Reduction Sleeve
625316	3/4" - 3/16" Reduction Sleeve
625104	3/4" - 1/4" Reduction Sleeve
625516	3/4" - 5/16" Reduction Sleeve
625308	3/4" - 3/8" Reduction Sleeve
625716	3/4" - 7/16 Reduction Sleeve
625102	3/4" - 1/2" Reduction Sleeve
625508	3/4" - 5/8" Reduction Sleeve
625003	3/4" - 3mnm Reduction Sleeve
625004	3/4" - 4mm Reduction Sleeve
625005	3/4" - 5mm Reduction Sleeve
625006	3/4" - 6mm Reduction Sleeve
625008	3/4" - 8mm Reduction Sleeve
625010	3/4" - 10mm Reduction Sleeve
625012	3/4" - 12mm Reduction Sleeve
625014	3/4" - 14mm Reduction Sleeve
625016	3/4" - 16mm Reduction Sleeve

*Blue shade = H-LOCKED