TECHNIKS TAPPING SOLUTIONS

QUALITY & PERFORMANCE GUARANTEED



MICROFLOAT

Synchronous Tapping Holders

INCREASE TAP LIFE 295%

TENSION-COMPRESSION TAP HOLDERS

Automatically compensate for machine feed rates to improve results.



RIGID TAP CHUCKS

Easy to use and reliable tap holders for general tapping applications.



TECHNIKS BUILT FOR SPEED

MICROFLOAT SYNCHRONOUS TAPPING HOLDERS

pg. 167 pg. 229 pg. 236 pg. 238



MicroFLOAT synchronous tapping holders compensate for synchronization errors between the spindle rotation, feed-rate, and the thread-pitch that create damaging forces on your taps during a rigid tapping cycle.

Limiting these effects ultimately provides unmatched stability and repeatablity to help you get the most out of your rigid tapping system.



ELIMINATE TAP BREAKAGE

THIS GRAPH SHOWS HOW MICROFLOAT REDUCES STRESS ON THE TAP DURING TAPPING CYCLE.

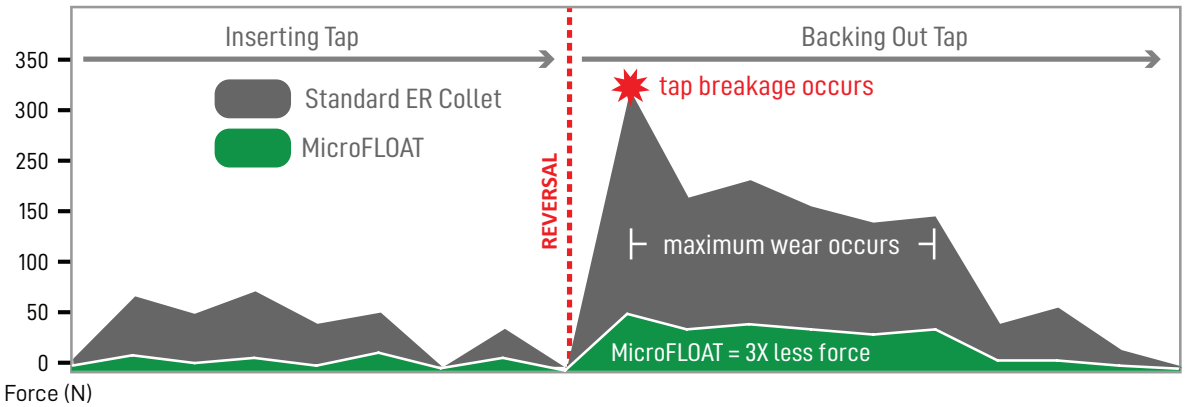

SYNCHRONOUS FEED EASES THE TAP THROUGH THE WHOLE CYCLE, PREVENTING BREAKAGE.

MICROFLOAT SYNCHRONOUS TAPPING HOLDERS

MicroFLOAT's synchronus feed technology automatically compensates for inconsistencies between the spindle rotation, feed-rates, and thread-pitch to reduce unwanted axial forces on the tap to produce the truest possible threads and extend tap life.

Internal steel spring compensation allows 0.008" (.2mm) of compression and 0.040" (1mm) of tension, effectively compensating for synchronization errors, protecting the tap from excessive axial forces and breaking.

Because the tap follows the exact same path both in and out of the hole, optimum thread quality and maximum tap life is achieved.

KEY TECHNOLOGY FEATURES

1. SYNCHRONOUS FEED
2. QUICK-CHANGE TAP ADAPTERS
3. MODULAR EXTENSIONS: UP TO 9"
4. COOLANT-THRU TECHNOLOGY

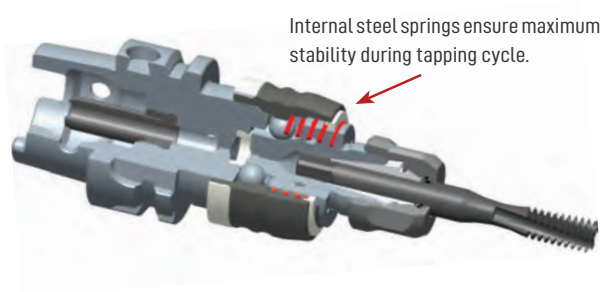





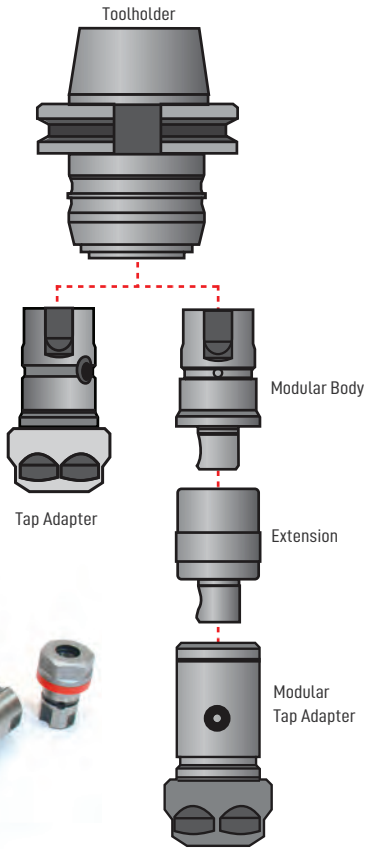

High-pressure (50 Bar) coolant through is standard.

We compared the performance of a MicroFLOAT holder to a standard ER rigid tap holder. The MicroFLOAT holder yielded 337 more threaded holes per tap, a 295% improvement.

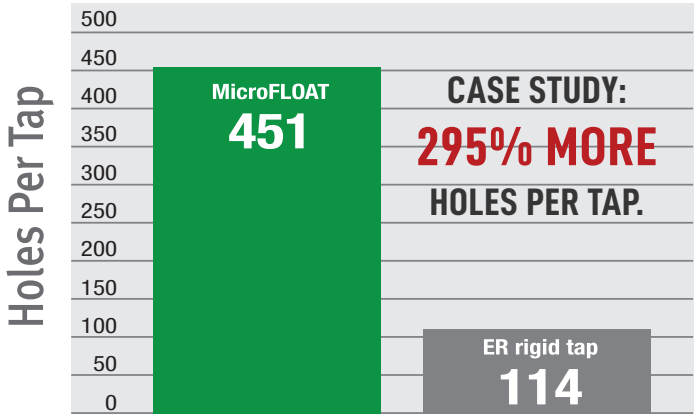



MICROFLOAT SYNCHRONOUS TAPPING HOLDERS

pg. 167 pg. 229 pg. 236 pg. 238

MICROFLOAT COMPONENTS

MicroFLOAT is an easy to use system that can be expanded to achieve lengths of 9" using modular extensions. Quick-change adapters makes tap replacement fast and easy.

MICROFLOAT CAN BE CONFIGURED THREE WAYS:

1. **Using a holder with a quick-change tap adapter**
2. **Holder with a modular body and modular tap adapter**
3. **Holder with a modular body, extensions, and modular tap adapter**

QUICK-CHANGE TAP ADAPTERS



MODULAR EXTENSIONS ACHIEVE LENGTHS UP TO 9"





MICROFLOAT TOOLHOLDERS

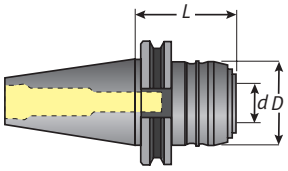

Part No.	Description	L	D	d	Collet Size
23400-40CAT	CAT40 holder #1	2.75"	1.7"	.79"	ER16
23600-40CAT	CAT40 holder #2	3.54"	2.36"	1.26"	ER25
23400-50CAT	CAT50 holder #1	2.75"	1.7"	.79"	ER16
23600-50CAT	CAT50 holder #2	3.54"	2.36"	1.26"	ER25
23400-30BT	BT30 holder #1	2.09"	1.7"	.79"	ER16
23400-40BT	BT40 holder #1	2.40"	1.7"	1.26"	ER16
23600-40BT	BT40 holder #2	3.22"	2.36"	1.26"	ER25
23400-H63A	HSK63A holder #1	2.52"	1.7"	.79"	ER16
23600-H63A	HSK63A holder #2	3.81"	2.36"	1.26"	ER25
23400-INC1	1" Straight Shank holder # 1	1.3"	1.7"	.79"	ER16
23600-INC1	1" Straight Shank holder # 2	2.13"	2.36"	1.26"	ER25

QUICK-CHANGE TAP ADAPTER

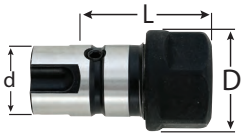

ER16 fits taps up to 3/8"

ER25 fits taps up to 11/16"

Part No.	Description	L	D	d
23410-ER16	ER16 tap adapter #1	1.46"	1.10"	.79"
23610-ER25	ER25 tap adapter #2	2.05"	1.65"	1.27"

MODULAR BODY

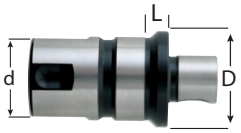

Part No.	Description	L	D	d
23411-MOD	Modular Body #1	.20"	.91"	.79"
23611-MOD	Modular Body #2	.28"	1.38"	1.26"

MODULAR EXTENSIONS

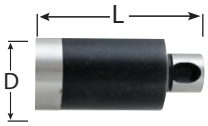

Part No.	Description	L	D	Chuck
42150-25	1" Mod. Extension #1	.98"	.91"	23400-..
42150-50	2" Mod. Extension #1	1.97"	.91"	23400-..
42250-50	2" Mod. Extension #2	1.97"	1.38"	23600-..
42250-100	4" Mod. Extension #2	3.94"	1.38"	23600-..

ER MODULAR TAP ADAPTERS



Part No.	Description	L	D	d
42147-ER16	ER16 Mod. Adapter #1	1.97"	1.10"	.91"
42247-ER25	ER25 Mod. Adapter #2	3.11"	1.65"	1.38"

RIGID TAP COLLETS FOR MICROFLOAT



FEATURES

- Square drive prevents spinning the tap
- High-carbon steel, heat treated for long life
- Precision ground and polished

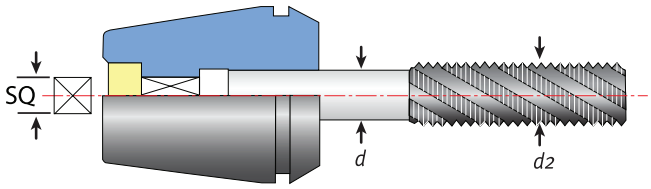

ER16 / ER25 RIGID TAP COLLETS INCH

Part No.	Size	d	SQ	Tap Size (d2)
05320-141	ER16	.141"	.110"	1/8" or #6
05320-168	ER16	.168"	.131"	5/32" or #8
05320-194	ER16	.194"	.152"	3/16" or #10
05320-220	ER16	.220"	.165"	7/32" or #12
05320-255	ER16	.255"	.191"	1/4"
05320-318	ER16	.318"	.238"	5/16"
05320-323	ER16	.323"	.242"	7/16"
05320-367	ER16	.367"	.275"	1/2"
05320-381	ER16	.381"	.286"	3/8"
05510-141	ER25	.141"	.110"	1/8" or #6
05510-168	ER25	.168"	.131"	5/32" or #8
05510-194	ER25	.194"	.152"	3/16" or #10
05510-220	ER25	.220"	.165"	7/32" or #12
05510-255	ER25	.255"	.191"	1/4"
05510-318	ER25	.318"	.238"	5/16"
05510-323	ER25	.323"	.242"	7/16"
05510-367	ER25	.367"	.275"	1/2"
05510-381	ER25	.381"	.286"	3/8"
05510-429	ER25	.429"	.322"	9/16"
05510-437	ER25	.437"	.328"	1/8" NPT
05510-480	ER25	.480"	.360"	5/8"
05510-542	ER25	.542"	.406"	11/16"

ER16 / ER25 RIGID TAP COLLETS METRIC

Part No.	Size	d	SQ	Tap Size (d2)
05326	ER16	2.8	2.1	M4
05330	ER16	3.5	2.7	M3
05336	ER16	4.5	3.4	M4
05342	ER16	6	4.9	M5/M6
05350	ER16	8	6.2	M8
05352	ER16	8.5	6.5	M12
05354	ER16	9	7	M12
05356	ER16	10	8	M10
05371	ER16	6	4.5	M6
05385	ER16	6.2	5	M8
05526	ER25	4.5	3.4	M4
05534	ER25	6	4.9	M5/M6
05540	ER25	7	5.5	M10
05542	ER25	8	6.2	M8
05548	ER25	9	7	M12
05550	ER25	10	8	M10
05554	ER25	11	9	M14
05558	ER25	12	9	M16

TENSION/COMPRESSION TAP HOLDERS

pg. 167 pg. 229 pg. 236 pg. 238



EATURES

- Adjustible compression helps start difficult taps
- Taper ground to AT3 accuracy or better
- Quick-Change Style

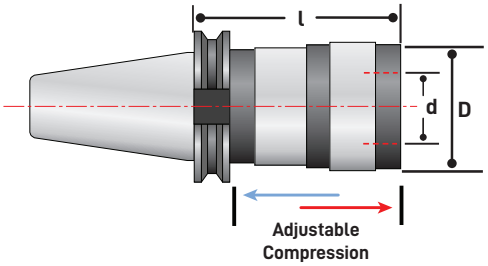

CAT TENSION / COMPRESSION TAP HOLDERS

Part No.	Description	d	D	l	Size	Tap Capacity	Compensation Tension	Compensation Compression
32400/40CAT	CAT40 T/C Holder, Size 1	.748"	1.5"	2.36"	1	0 – 9/16"	.35"	.35"
32400/50CAT	CAT50 T/C Holder, Size 1	.748"	1.5"	2.44"	1	0 – 9/16"	.35"	.35"
32600/40CAT	CAT40 T/C Holder, Size 2	1.220"	2.17"	3.94"	2	5/16 – 7/8"	.59"	.59"
32600/50CAT	CAT50 T/C Holder, Size 2	1.220"	2.17"	3.27"	2	5/16 – 7/8"	.59"	.59"
32800/40CAT	CAT40 T/C Holder, Size 3	1.890"	3.11"	5.43"	3	1/2 – 1-3/8"	.94"	.94"
32800/50CAT	CAT50 T/C Holder, Size 3	1.890"	3.11"	5.24"	3	1/2 – 1 3/8"	.94"	.94"
32900/40CAT	CAT40 T/C Holder, Size 4	2.362"	3.86"	6.06"	4	1-7/16 – 1-7/8"	1.02"	1.02"
32900/50CAT	CAT50 T/C Holder, Size 4	2.362"	3.86"	5.79"	4	1-7/16 – 1-7/8"	1.02"	1.02"

BT TENSION / COMPRESSION TAP HOLDERS

Part No.	Description	d	D	l	Size	Tap Capacity	Compensation Tension	Compensation Compression
32400/30BT	BT30 T/C Holder, Size 1	.748"	1.5"	2.48"	1	0 – 9/16"	.35"	.35"
32400/40BT	BT40 T/C Holder, Size 1	.748"	1.5"	2.68"	1	0 – 9/16"	.35"	.35"
32400/50BT	BT50 T/C Holder, Size 1	.748"	1.5"	3.15"	1	0 – 9/16"	.35"	.35"
32600/30BT	BT30 T/C Holder, Size 2	1.220"	2.17"	3.78"	2	5/16 – 7/8"	.59"	.59"
32600/40BT	BT40 T/C Holder, Size 2	1.220"	2.17"	3.66"	2	5/16 – 7/8"	.59"	.59"
32600/50BT	BT50 T/C Holder, Size 2	1.220"	2.17"	4.02"	2	5/16 – 7/8"	.59"	.59"
32800/40BT	BT40 T/C Holder, Size 3	1.890"	3.11"	5.43"	3	1/2 – 1-3/8"	.94"	.94"
32800/50BT	BT50 T/C Holder, Size 3	1.890"	3.11"	5.31"	3	1/2 – 1-3/8"	.94"	.94"
32900/40BT	BT40 T/C Holder, Size 4	2.362"	3.86"	6.18"	4	1-7/16 – 1-7/8"	1.02"	1.02"
32900/50BT	BT50 T/C Holder, Size 4	2.362"	3.86"	5.79"	4	1-7/16 – 1-7/8"	1.02"	1.02"

TENSION/COMPRESSION TAP HOLDERS



FEATURES

- Adjustible compression helps start difficult taps
- Quick-Change Style

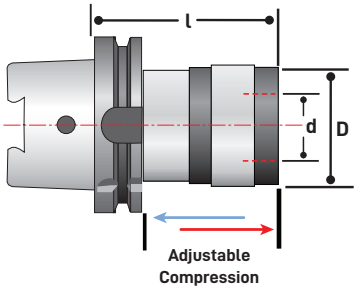

HSK-A TENSION / COMPRESSION TAP HOLDERS

Part No.	Description	d	D	l	Size	Tap Capacity	Compensation Tension	Compensation Compression
34400/H40A	HSK40A T/C Holder, Size 1	.748"	1.5"	3.14"	1	0 – 9/16"	.295"	.295"
34400/H50A	HSK50A T/C Holder, Size 1	.748"	1.5"	2.83"	1	0 – 9/16"	.295"	.295"
34400/H63A	HSK63A T/C Holder, Size 1	.748"	1.5"	2.83"	1	0 – 9/16"	.295"	.295"
34400/H100A	HSK100A T/C Holder, Size 1	.748"	1.5"	3.14"	1	0 – 9/16"	.295"	.295"
34600/H50A	HSK50A T/C Holder, Size 2	1.22"	2.17"	4.33"	2	5/16 – 7/8"	.393"	.393"
34600/H63A	HSK63A T/C Holder, Size 2	1.22"	2.17"	4.33"	2	5/16 – 7/8"	.393"	.393"
34600/H100A	HSK100A T/C Holder, Size 2	1.22"	2.17"	3.94"	2	5/16 – 7/8"	.393"	.393"



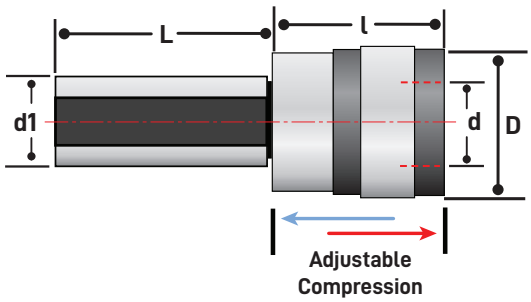

STRAIGHT SHANK TAPPING CHUCKS

Part No.	Description	D1	D	l	L	Tap Capacity	Compensation Tension	Compensation Compression
32400/INC1	1" shank T/C Holder, Size 1	1"	1.5"	1.76"	1.95"	0 – 9/16"	.35"	.35"
32600/INC1	1" shank T/C Holder, Size 2	1"	2.17"	2.52"	2"	5/16 – 7/8"	.59"	.59"
32600/INC1-1/2	1 1/2" shank T/C Holder, Size 2	1.50"	2.17"	2.52"	3.50"	5/16 – 7/8"	.59"	.59"
32800/INC1-1/2	1 1/2" shank T/C Holder, Size 3	1.50"	3.38"	3.85"	3.50"	1/2 – 1 3/8"	.94"	.94"

RIGID TAP HOLDERS

pg. 167 pg. 229 pg. 236 pg. 238



FEATURES

- Taper ground to AT3 accuracy or better
- Quick-Change Style

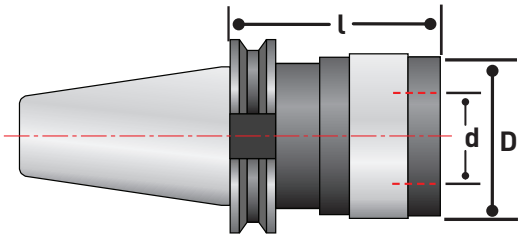

CAT RIGID TAP HOLDERS

Part No.	Description	l	D	d	Size	Tap Capacity
21480/40CAT	CAT40 Rigid Tap Holder, Size 1	2.59"	1.31"	.748"	1	0 – 9/16"
21480/50CAT	CAT50 Rigid Tap Holder, Size 1	2.95"	1.31"	.748"	1	0 – 9/16"
21680/40CAT	CAT40 Rigid Tap Holder, Size 2	3.23"	1.97"	1.22"	2	5/16 – 7/8"
21680/50CAT	CAT50 Rigid Tap Holder, Size 2	3.86"	1.97"	1.22"	2	5/16 – 7/8"
21880/40CAT	CAT40 Rigid Tap Holder, Size 3	4.80"	2.83"	1.89"	3	1/2 – 1 3/8"
21880/50CAT	CAT50 Rigid Tap Holder, Size 3	4.80"	2.83"	1.89"	3	1/2 – 1-3/8"

BT RIGID TAP HOLDERS

Part No.	Description	l	D	d	Size	Tap Capacity
21480/30BT	BT30 Rigid Tap Holder, Size 1	2.80"	1.31"	.748"	1	0 - 9/16"
21480/40BT	BT40 Rigid Tap Holder, Size 1	2.63"	1.31"	.748"	1	0 - 9/16"
21480/50BT	BT50 Rigid Tap Holder, Size 1	3.07"	1.31"	.748"	1	0 - 9/16"
21680/30BT	BT30 Rigid Tap Holder, Size 2	3.70"	1.97"	1.22"	2	5/16 - 7/8"
21680/40BT	BT40 Rigid Tap Holder, Size 2	3.54"	1.97"	1.22"	2	5/16 - 7/8"
21680/50BT	BT50 Rigid Tap Holder, Size 2	3.97"	1.97"	1.22"	2	5/16 - 7/8"
21880/40BT	BT40 Rigid Tap Holder, Size 3	4.61"	2.83"	1.89"	3	1/2 - 1 3/8"
21880/50BT	BT50 Rigid Tap Holder, Size 3	4.80"	2.83"	1.89"	3	1/2 - 1 3/8"

RIGID TAP HOLDERS



FEATURES

- Quick-Change Style

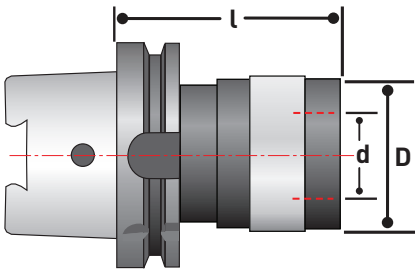

HSK RIGID TAP HOLDERS

Part No.	Description	l	D	d	Size	Tap Capacity
21480/H50A	HSK50A Rigid Tap Holder, Size 1	2.30"	1.31"	.748"	1	0 - 9/16"
21480/H63A	HSK63A Rigid Tap Holder, Size 1	2.32"	1.31"	.748"	1	0 - 9/16"
21480/H100A	HSK100A Rigid Tap Holder, Size 1	2.95"	1.31"	.748"	1	0 - 9/16"
21680/H50A	HSK50A Rigid Tap Holder, Size 2	3.23"	1.97"	1.22"	2	5/16 - 7/8"
21680/H63A	HSK63A Rigid Tap Holder, Size 2	3.23"	1.97"	1.22"	2	5/16 - 7/8"
21680/H100A	HSK100A Rigid Tap Holder, Size 2	3.86"	1.97"	1.22"	2	5/16 - 7/8"
21880/H63A	HSK63A Rigid Tap Holder, Size 3	4.80"	2.83"	1.89"	3	1/2 - 1 3/8"
21880/H100A	HSK100A Rigid Tap Holder, Size 3	4.80"	2.83"	1.89"	3	1/2 - 1 3/8"



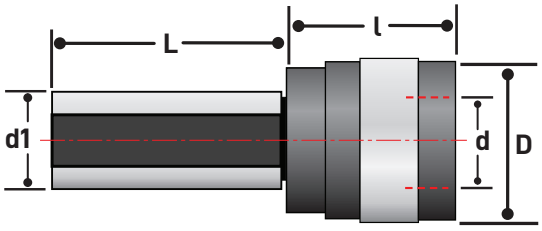

STRAIGHT SHANK RIGID TAP HOLDERS

Part No.	Description	d1	L	l	D	d	Tap Capacity
21480/INC1	1" shank, Rigid Tap Holder, Size 1	1"	1.95"	1.60"	1.31"	.748"	0 – 9/16"
21680/INC1	1" shank, Rigid Tap Holder, Size 2	1"	2"	2.50"	1.97"	1.22"	3/8 – 7/8"
21880/INC1-1/2	1 1/2" shank, Rigid Tap Holder, Size 3	1.50"	3.50"	3.44"	2.83"	1.89"	1/2 – 1 3/8"

ANSI RIGID TAP COLLETS

pg. 167 pg. 229 pg. 236 pg. 238



FEATURES

- Change worn taps in seconds
- Quick-Change Style

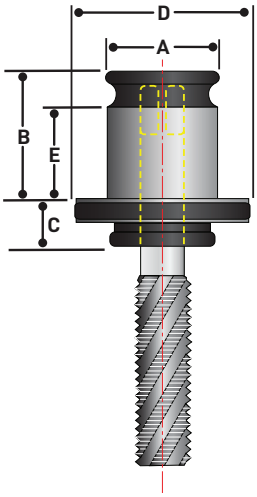

COLLET SETS

Part No.	Description
19/11-SET	Size 1, 11 pcs. (0-6" thru 9/16" & 1/8" NPT)
31/12-SET	Size 2, 13 pcs. (5/16" thru 1/2" NPT)
48/13-SET	Size 3, 16 pcs. (1/2" thru 1" NPT)

DIMENSIONS

Dimensions	A	B	C	D	E
Size 1	.75"	.85"	.28"	1.18"	.39"
Size 2	1.22"	1.38"	.43"	1.81"	.75"
Size 3	1.89"	2.19"	.55"	2.68"	1.18"
Size 4	2.36"	2.48"	1.65"	3.27"	1.14"

ANSI RIGID TAP COLLETS

ANSI	Metric Tap / ANSI Shank	Shank	SQ	Size 1	Size 2	Size 3	Size 4
0-6"	M1.6-M3.5	.141"	.110"	19/11-4036			
8, 5/32"	M4	.168"	.131"	19/11-4041			
10, 3/16"	M4.5, M5	.194"	.152"	19/11-4048			
12, 7/32"		.220"	.165"	19/11-4054			
1/4"	M6, M6.3	.255"	.191"	19/11-4063			
5/16"	M7, M8	.318"	.238"	19/11-4079	31/12-4079		
3/8"	M10	.381"	.286"	19/11-4095	31/12-4095		
7/16"	M11	.323"	.242"	19/11-4111	31/12-4111		
1/2"	M12, M12.5	.367"	.275"	19/11-4127	31/12-4127	48/13-4127	
9/16"	M14	.429"	.322"	19/11-4142	31/12-4142	48/13-4142	
5/8"	M16	.480"	.360"		31/12-4158	48/13-4158	
11/16"	M18	.542"	.406"		31/12-4174	48/13-4174	
3/4"		.590"	.442"		31/12-4190C	48/13-4190	
13/16"	M20	.652"	.489"		31/12-4206C	48/13-4206	
7/8"	M22	.697"	.523"		31/12-4222C	48/13-4222	
15/16"	M24	.760"	.570"			48/13-4238	
1"	M25	.800"	.600"			48/13-4254	
1 1/8, 1 1/16"	M27	.896"	.672"			48/13-4286	
1 1/4, 1 3/16"	M30	1.021"	.766"			48/13-4317	
1 3/8, 1 5/16"	M33	1.108"	.831"			48/13-4349	
1 1/2, 1 7/16"	M36	1.233"	.925"				60/14-4381C
1 5/8"	M39	1.305"	.979"				60/14-4412C
1 3/4"	M42	1.430"	1.072"				60/14-4444C
1 7/8"		1.520"	1.139"				60/14-4476C
1/8" NPT		.437"	.328"	19/11-4097			
1/4" NPT		.562"	.421"		31/12-4131C		
3/8" NPT		.700"	.531"		31/12-4166C	48/13-4166C	
1/2" NPT		.687"	.515"		31/12-4209C	48/13-4209C	
3/4" NPT		.906"	.678"			48/13-4264C	
1" NPT		1.125"	.843"			48/13-4332C	

ANSI CLUTCH DRIVE TAP COLLETS



FEATURES

- Prevents broken taps
- Automatically stops spinning when bottom is reached
- Change worn taps in seconds

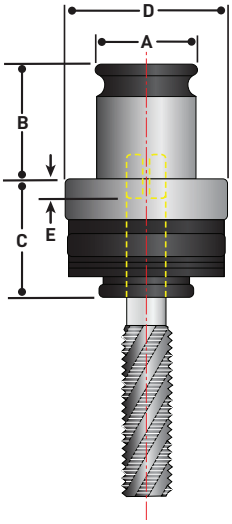

DIMENSIONS

Dimensions	A	B	C	D	E
Size 0	.51"	.77"	.83"	.91"	.24"
Size 1	.75"	.85"	.98"	1.26"	.31"
Size 2	1.22"	1.38"	1.34"	1.97"	.16"
Size 3	1.89"	2.19"	1.77"	2.83"	.04"

COLLET SET

Part No.	Description
48/3-SET	Size 3, 16 pcs. (1/2" thru 1" NPT)
19/1-SET	Size 1, 11 pcs. (0.141" thru 1/8" NPT)
31/2-SET	Size 2, 13 pcs. (5/16" thru 1/2" NPT)

ANSI CLUTCH DRIVE TAP COLLETS

ANSI	Metric Tap / ANSI Shank	Shank	SQ	Size 0	Size 1	Size 2	Size 3
0-6"	M1.6-M3.5	.141"	.110"	13/0-4036	19/1-4036		
8, 5/32"	M4	.168"	.131"	13/0-4041	19/1-4041		
10, 3/16"	M4.5, M5	.194"	.152"	13/0-4048	19/1-4048		
12, 7/32"		.220"	.165"	13/0-4054	19/1-4054		
1/4"	M6, M6.3	.255"	.191"	13/0-4063	19/1-4063		
5/16"	M7, M8	.318"	.238"		19/1-4079	31/2-4079	
3/8"	M10	.381"	.286"		19/1-4095	31/2-4095	
7/16"	M11	.323"	.242"		19/1-4111	31/2-4111	
1/2"	M12, M12.5	.367"	.275"		19/1-4127	31/2-4127	48/3-4127
9/16"	M14	.429"	.322"		19/1-4142	31/2-4142	48/3-4142
5/8"	M16	.480"	.360"			31/2-4158	48/3-4158
11/16"	M18	.542"	.406"			31/2-4174	48/3-4174
3/4"		.590"	.442"			31/2-4190	48/3-4190
13/16"	M20	.652"	.489"			31/2-4206	48/3-4206
7/8"	M22	.697"	.523"			31/2-4222	48/3-4222
15/16"	M24	.760"	.570"				48/3-4238
1"	M25	.800"	.600"				48/3-4254
1 1/8, 1 1/16"	M27	.896"	.672"				48/3-4286
1 1/4, 1 3/16"	M30	1.021"	.766"				48/3-4317
1 3/8, 1 5/16"	M33	1.108"	.831"				48/3-4349
1/8" NPT		.437"	.328"		19/1 - 4097		
1/4" NPT		.562"	.421"			31/2-4131C	
3/8" NPT		.700"	.531"			31/2-4166C	48/3-4166C
1/2" NPT		.687"	.515"			31/2-4209C	48/3-4209C
3/4" NPT		.906"	.678"				48/3-4264C
1" NPT		1.125"	.843"				48/3-4332C

Note: Metric tap collets available on request. Please verify shank diameter when ordering metric tap collets.

RECOMMENDED COLLET NUT & RETENTION KNOB TIGHTENING TORQUE

Collet	Nut Type	Collets I.D. OVER 1/16" (2mm)	Collets I.D. UNDER 1/16" (2mm)	Order Torque Wrench Adapter
ER11	Mini	12 ft/lbs	10 ft/lbs	04576
ER11	Hex	17 ft/lbs	14 ft/lbs	04581
ER16	Mini	20 ft/lbs	16 ft/lbs	04578
ER16	Slotted	42 ft/lbs	30 ft/lbs	04580-16
ER16	Hex	42 ft/lbs	30 ft/lbs	04601-16
ER20	Mini	22 ft/lbs	18 ft/lbs	04578
ER20	Slotted	59 ft/lbs	24 ft/lbs	04580-20
ER20	Hex	59 ft/lbs	24 ft/lbs	04602-20
ER25	Mini	28 ft/lbs	28 ft/lbs	04587
ER25	Slotted	77 ft/lbs	77 ft/lbs	04603-25
ER32	Slotted	100 ft/lbs	100 ft/lbs	04604-32
ER40	Slotted	130 ft/lbs	130 ft/lbs	04605-40
SYOZ 25/TG100	Hook	95 ft/lbs	95 ft/lbs	03690-25
TG75	Hex	90 ft/lbs	90 ft/lbs	04604-32

Always tighten retention knobs to exact specification or damage to tooling or bodily harm may occur.

Retention Knobs	Wrench Flats	Drive	Torque	Order Socket
BT30 Taper	0.535"	1/4"	36 ft/lbs	PSS-30BT
ISO 30 Taper	0.535"	3/8"	36 ft/lbs	PSS-30ISO
Any 40 Taper	0.750"	3/8"	76 ft/lbs	PSS-40
BT50 Taper	1.187"	1/2"	99 ft/lbs	PSC-50
CAT50 Taper	1.250"	1/2"	99 ft/lbs	PSC-50

**Always use a torque wrench and tightening stand when tightening collet nuts and retention knobs. Overtightening collet nuts will cause premature damage to collets and increase run-out.

DIRECTIONS

- **Snap collet into nut.**
- **Insert cutting tool into collet. Make sure shank extends to the bottom of the collet.**
- **Hand tighten collet nut assembly into toolholder.**
- **Insert toolholder assembly into tightening fixture and secure it.**
- **Tighten collet nut to recommended torque using a torque wrench and adapter.**

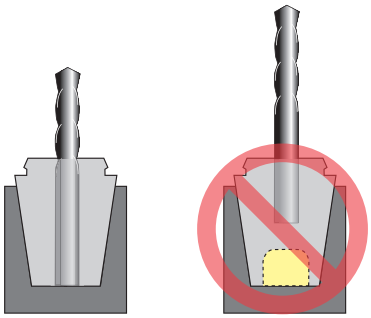

For maximum holding power fill the collet all the way with the tool shank (left) and use a PowerCOAT nut.